LINFAN MAO

AUTOMORPHISM GROUPS OF MAPS, SURFACES AND SMARANDACHE GEOMETRIES

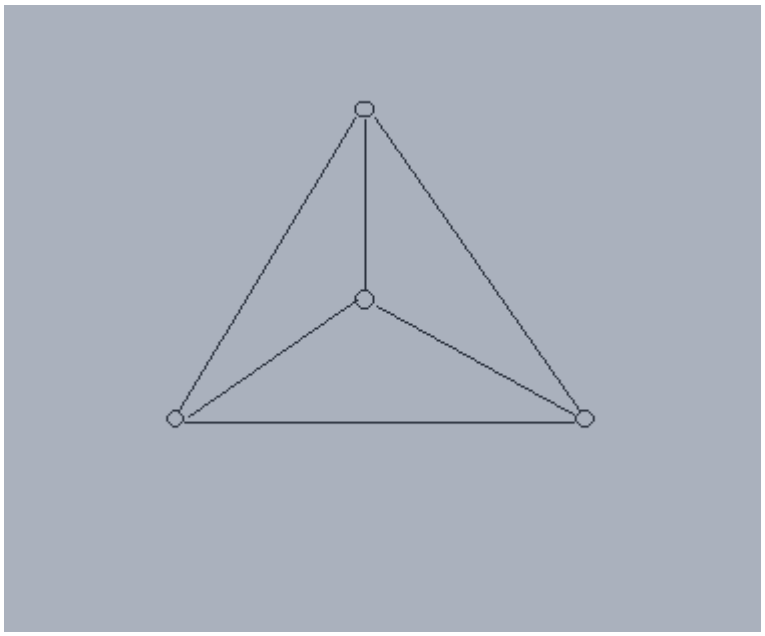

American Research Press

Rehoboth, NM

2005

Linfan MAO

Institute of Systems Science
Academy of Mathematics and Systems
Chinese Academy of Sciences
Beijing 100080, P.R.China
maolinfan@163.com

AUTOMORPHISM GROUPS OF MAPS, SURFACES AND SMARANDACHE GEOMETRIES

Partially post-doctoral research for the Chinese Academy of Sciences

American Research Press

Rehoboth, NM

2005

This book can be ordered in a paper bound reprint from:

Books on Demand
ProQuest Information & Learning
(University of Microfilm International)
300 N.Zeeb Road
P.O.Box 1346, Ann Arbor
MI 48106-1346, USA
Tel:1-800-521-0600(Customer Service)
http://wwwlib.umi.com/bod/search/basic

Peer Reviewers:

F.Tian and X.D.Hu, Academy of Mathematics and Systems, Chinese Academy of Sciences, Beijing 100080, P.R.China.

Y.P.Liu and R.X.Hao, Department of Applied Mathematics, Beijing Jiaotong University, Beijing 100044, P.R.China.

S.Bhattacharya, Alaska Pacific University, AK, USA.

H.Iseri, Department of Mathematics and Computer Information Science, Mansfield University, Mansfield, PA 16933, USA.

Copyright 2005 by American Research Press and Linfan Mao
Rehoboth, Box 141
NM 87322, USA

Many books can be downloaded from the following **E-Library of Science**:
http://www.gallup.unm.edu/˜ smarandache/eBooks-otherformats.htm

ISBN:1-931233-92-6

Standard Address Number: 297-5092
Printed in the United States of America

Preface

A combinatorial map is a connected topological graph cellularly embedded in a surface. As a linking of combinatorial configuration with the classical mathematics, it fascinates more and more mathematician's interesting. Its function and role in mathematics are widely accepted by mathematicians today.

On the last century, many works are concentrated on the combinatorial properties of maps. The main trend is the enumeration of maps, particularly the rooted maps, pioneered by W. Tutte, and today, this kind of papers are still appeared on the journals frequently today. All of those is surveyed in Liu's book [33]. To determine the embedding of a graph on surfaces, including coloring a map on surfaces is another trend in map theory. Its object is combinatorialization of surfaces, see Gross and Tucker [22], Mohar and Thomassen [53] and White [70], especially the [53] for detail. The construction of regular maps on surfaces, related maps with groups and geometry is a glimmer of the map theory with other mathematics.

In fact, maps as a kind of the decomposition of surfaces, should be given more attention to its role in surfaces theory, such as the Riemann surfaces, Klein surfaces and manifolds theory. As a simple case of the general manifolds, we know that Riemann surfaces have become a source of the mathematical creative power. Many good ideas for the manifolds with higher dimension are inspired by the Riemann surfaces. The relation of maps with Riemann surfaces has been known in 80s in the last century. Then how to realization or making combinatorial refinement for the Riemann surfaces, Riemann geometry and finally, the Smarandache geometries by maps is a very interesting problem. Unless the enumeration of unrooted maps on surfaces, more attentions are given to the combinatorial refinement of some famous results in Riemann surfaces, Klein surfaces and s-manifolds in this book. Although the results obtained are quite elementary, it is still valuable probe by researchers, especially, those of mathematicians in combinatorics, Klein surfaces or Smarandache geometries.

Now we outline the main contents in each chapter.

Chapter 1 is preliminary. We introduce the conceptions of Klein surfaces, Smarandache geometries, maps and the semi-arc automorphism group of a graph.

A relation for maps and Smarandache manifolds (abbreviated s-manifolds) and a scheme for the enumeration of unrooted maps are established in this chapter. The last section determines the relation of the number of embeddings and rooted maps of a graph on genus. A general equation for the total genus polynomial and rooted total map polynomial is found in this section.

As a combinatorial model of the Klein surfaces and s-manifolds, Chapter 2 concerns the automorphisms of a map, a Klein surface and an s-manifold. The voltage map in the topological graph theory is defined by algebraic and some common results are reproved under this definition. Conditions for a group being that of a map are gotten in the first two sections. A combinatorial refinement of the Hurwitz theorem in Riemann surfaces, and similar results for the Klein surfaces and s-manifolds are obtained in the Section 3. The Section 4 concerns the order of an automorphism of Klein surfaces and s-manifolds by maps, which is an interesting problem for researchers in the Klein surfaces and Smarandache geometries. The results gotten in this section are better than those of results already known.

Chapter 3 presents a necessary and sufficient condition for a group of a graph being that of a map. This chapter also give all concrete representation of automorphisms of maps underlying a complete graph, a semi-regular graph and a bouquet, which is difficult in the researching of Klein surfaces.

Chapter 4 is concentrated on the enumeration of unrooted maps and s-manifolds by applying the results obtained in the previous chapters. The enumeration problem of unrooted maps on surfaces is generally recognized a difficult problem. The unrooted complete maps, the semi-regular maps and one face maps on orientable and non-orientable surfaces are enumerated in this chapter. The last section gives an elementary classification for the closed s-manifolds by maps.

The last chapter presents some open problems related to the Riemann geometry and Smarandache geometries for the combinatorial maps. Although it is called open problems, in fact, any solution for one of these problems needs to establish a new mathematical system first. But as soon as the system has been established, the contribution of combinatorics to classical mathematics, such as, the Riemann geometry and Smarandache geometries is realized. Those are the wish of mine, and they are also the main problems considered by me in the following times.

The main part of this book is my post-doctor report in the Chinese Academy

of Sciences in 2005. Many colleagues and friends of mine have given me enthusiastic support and endless helps in preparing this book. Without their helps, this book will never appears. Here I must mention some of them. On the first, I would like to give my sincerely thanks to Professor Feng Tian for his encouraging and invaluable helps and to professor Yanpei Liu introduced me into the filed of combinatorial map theory. Thanks are also given to Professor Mingyao Xu, Professor Yanxun Chang, Professor Xiaodong Hu, Professor Han Ren, Professor Rongxia Hao, Professor Weili He and Erling Wei for their kindly helps and often discussing problems in mathematics altogether. Of course, I am responsible for the correctness all of the material presented here. Any suggestions for improving this book are welcome.

L.F.Mao
AMSS, Beijing
June, 2005

Contents

Preface i

Chapter 1 Preliminary 1

§1 Klein surface and s-manifolds 1

1.1 Definitions 1

1.2 Classification of Klein surfaces and s-manifolds 3

§2 Map and embedding of a graph on surface 4

2.1 Graphs 4

2.2 The embedding of a graph on surfaces 6

2.3 Map and rooted map on surface 8

2.4 Classification maps and embeddings of a graph on a surfaces 10

2.5 Maps as a combinatorial model of Klein surfaces and s-manifolds 12

§3 The semi-arc automorphism group of a graph with application to maps enumeration 13

3.1 The semi-arc automorphism group of a graph 13

3.2 A scheme for enumerating maps underlying a graph 17

§4 A relation among the total embeddings and rooted maps of a graph on genus 20

4.1 The rooted total map and embedding polynomial of a graph 20

4.2 The number of rooted maps underlying a graph on genus 24

Chapter 2 On the automorphisms of a Klein Surface and a s-manifold 31

§1 An algebraic definition of a voltage map 31

1.1 Coverings of a map 31

1.2 Voltage maps 33

§2 Combinatorial conditions for a group being that of a map 35

2.1 Combinatorial conditions for an automorphism group of a map 36

2.2 The measures on a map 41

§3 A combinatorial refinement of Huriwtz theorem 44

§4 The order of an automorphism of a Klein surface 50

4.1 The minimum genus of a fixed-free automorphism 51

4.2 The maximum order of an automorphism of a map 54

Chapter 3 On the Automorphisms of a graph on Surfaces 57
§1 A necessary and sufficient condition for a group of a graph being that of a map 57
§2 The automorphisms of a complete graph on surfaces 64
§3 The automorphisms of a semi-regular graph on surfaces 73
§4 The automorphisms of one face maps 76
Chapter 4 Application to the Enumeration of Unrooted Maps and s-Manifolds 81
§1 The enumeration of unrooted complete maps on surfaces 81
§2 The enumeration of a semi-regular graph on surfaces 88
§3 The enumeration of a bouquet on surfaces 91
§4 A classification of the closed s-manifolds 97
Chapter 5 Open Problems for Combinatorial Maps 103
5.1 The uniformization theorem for simple connected Riemann surfaces 103
5.2 The Riemann-Roch theorem 104
5.3 Combinatorial construction of an algebraic curve of genus 105
5.4 Classification of s-manifolds by maps 105
5.5 Gauss mapping among surfaces 106
5.6 The Gauss-Bonnet theorem 106
5.7 Riemann manifolds 107
References 108
Index 113

Chapter 1 Preliminary

All surfaces are 2-dimensional compact manifolds without boundary, graphs are connected, possibly with loops or multiple edges and groups are finite in the context. For terminology and notation not defined in this book can be seen in [33], [34] and [35] for graphs and maps and in [6], [73] for groups.

§1. Klein surface and s-manifold

1.1 Definitions

1.1.1 Definition of a Klein surface

The notion of *Klein surface* is introduced by Alling and Greenleaf [2] in 1971 concerned with real algebraic curves, correspondence with that of *Riemann surface* concerned with complex algebraic curves. For introducing this concept, it is need to enlarge analytic functions to those of dianalytic functions first.

Now let $f : A \longrightarrow \mathcal{C}$ be a mapping. Write $z = x + iy, x, y \in \mathcal{R}, i = \sqrt{-1}, \overline{z} = x - iy$ and $f(z) = u(x, y) + iv(x, y)$ $\overline{f(z)} = u(x, y) - iv(x, y)$for certain functions $u, v : A \longrightarrow \mathcal{R}$.

A mapping $f : A \longrightarrow \mathcal{C}$ is *analytic* on A if $\frac{\partial f}{\partial \overline{z}} = 0$ (*Cauchy-Riemann equation*) and is *antianlytic* on A if $\frac{\partial f}{\partial z} = 0$.

A mapping f is said to be *dianalytic* if its restriction to every connected component of A is analytic or antianalytic.

Now we can formally define a Klein surface.

A *Klein surface* is a Hausdorff, connected, topological space S together with a family $\sum = \{(U_i, \phi_i) \ |i \in I\}$ such that the chart $\{U_i|i \in I\}$ is an open covering of S, each map $\phi_i : U_i \longrightarrow A_i$ is a homeomorphism onto an open subset A_i of $\mathcal{C}$ or $\mathcal{C}^+ = \{z \in \mathcal{C} : Imz \geq 0\}$ and the transition functions

$$\phi_{ij} = \phi_i \phi_j^- : \phi_j(U_i \bigcap U_j) \longrightarrow \phi_i(U_i \bigcap U_j).$$

are dianalytic.

The family $\sum$ is said to be a topological *atlas* on S.

The *boundary* of S is the set

$$\begin{aligned}\partial S &= \{x \in S | there\ exists\ i \in I, x \in U_i, \phi_i(x) \in \mathcal{R} \\ &and\ \ \phi_i(U_i) \subseteq \mathcal{C}^+\}.\end{aligned}$$

The existence of Klein surfaces is obvious, for example, a Riemann surface is a Klein surface viewed as an orientable surface with empty boundary and $\sum$ to be analytic functions. Whence, we have the following relation:

$$\{Riemann\ Sufaces\} \subset \{Klein\ surfaces\}.$$

The upper half plane $H = \{z \in \mathcal{C} | Imz > 0\}$ with $\{(U_1 = H, \phi_1 = 1_H)\}$ and the open unit disc $D = \{z \in \mathcal{C} || z| < 1\}$ with $\{(U_1 = d, \phi_1 = 1_D)\}$ in $\mathcal{C}$ are two Klein surfaces with empty boundary and analytic structures.

If $k(S), g(S)$ and $\chi(S)$ are the number of connected components of ∂S, the topological genus and the Euler characteristic of a surface S, then we have that

Theorem 1.1.1([2])

$$\chi(S) = \begin{cases} 2 - 2g(S) - k(S), & \text{if } S \text{ is orientable,} \\ 2 - g(S) - k(S). & \text{if } S \text{is non} - \text{orientable.} \end{cases}$$

1.1.2 Definition of a Smarandache geometry

By the history, we know that classical geometries include the Euclid geometry, the hyperbolical geometry and the Riemann's geometry. Each of the later two is proposed by denial the 5th postulate for parallel lines in the Euclid postulates of geometry. The *Smarandache geometries* is proposed by Smarandache in 1969 ([61]), which is a generalization of the classical geometries, i.e., the Euclid, Lobachevshy-Bolyai-Gauss and Riemannian geometries may be united altogether in the same space, by some Smarandache geometries. These last geometries can be either partially Euclidean and partially Non-Euclidean, or Non-Euclidean. It seems that the Smarandache geometries are connected with the *Relativity Theory* (because they include the Riemann geometry in a subspace) and with the *Parallel Universes* (because they combine separate spaces into one space) too([32]).

In [61], Smarandache defined several specific types of Smarandache geometries, such as the *paradoxist geometry*, the *non-geometry*, the *counter-projective geometry* and the *anti-geometry*. He also posed a question on the paradoxist geometry, i.e., *find a nice model on manifolds for this paradoxist geometry and study some of its characteristics*.

An axiom is said *smarandachely denied* if in the same space the axiom behaves differently (i.e., validated and invalided; or only invalided but in at least two district ways).

A *Smarandache geometry* is a geometry which has at least one smarandachely denied axiom[1*] . At present, the Smarandache manifolds (abbreviated s-manifolds) are the central object discussed in the Smarandache geometries today. More results for the Smarandache geometries can be seen in the references [4], [16],[27] − [28], [32] and [58] − [59] etc..

The idea of an s-manifold was based on a hyperbolic paper in [69] and credited to W.Thurston. A more general idea can be found in [59]. According to the survey [27] of H.Iseri, an *s-manifold* is combinatorially defined as follows:

An s-manifold is any collection $\mathcal{C}(T,n)$ of these equilateral triangular disks $T_i, 1 \leq i \leq n$ satisfying the following conditions:

(i) *Each edge e is the identification of at most two edges e_i, e_j in two distinct triangular disks $T_i, T_j, 1 \leq i, j \leq n$ and $i \neq j$;*

(ii) *Each vertex v is the identification of one vertex in each of five, six or seven distinct triangular disks.*

The vertices are classified by the number of the disks around them. A vertex around five, six or seven triangular disks is called an *elliptic vertex*, a *Euclid vertex* or a *hyperbolic vertex*, respectively.

An s-manifold is called closed if the number of triangular disks is finite and each edge is shared by exactly two triangular disks, each vertex is completely around by triangular disks. It is obvious that a closed s-manifold is a surface and its Euler characteristic can be defined by the Theorem 1.1.1.

1.2 Classification of Klein surfaces and s-manifolds

A *morphism* between the Klein surfaces S and S' is a continuous map $f : S \to S'$

[1]Also see *www.gallup.unm.edu/˜ samrandache/geometries.htm*

such that $f(\partial S) \subseteq \partial S'$ and given $s \in S$, there exist chart (U, ϕ) and (V, ψ) at s and $f(s)$ respectively, and an analytic function $F : \phi(U) \to \mathcal{C}$ such that

$$\psi(f(s)) = \Phi(F(\phi(s))),$$

where, $\Phi : \mathcal{C} \to \mathcal{C}^+ : x + iy \to x + i|y|$ is a continuous map.

An *automorphism* of a Klein surface S is an $1-1$ morphism $f : S \to S$. It has been known that for a given Klein surface S, the set $\mathrm{Aut}S$ of automorphisms of S forms a group with respect to the composition operation and $\mathrm{Aut}H = PGL(2, R)$.

Let Γ be a discrete subgroup of $\mathrm{Aut}H$. We say that Γ is a *non-euclidean crystallographic group*(shortly NEC group) if the quotient H/Γ is compact.

More results can be seen in [11]. Typical results for automorphisms of a Klein surface S are as follows.

Theorem 1.1.2([11]) *Let S be a compact Klein surface, $g = g(S)$ and $k = k(S)$, then*

(i) there exists an NEC group Γ such that $\mathrm{Aut}S \cong N_\Omega(\Gamma)/\Gamma$, where $\Omega = \mathrm{Aut}H$.

(ii) if S satisfies the condition $2g + k \geq 3$ if S is orientable and $g + k \geq 3$ if S is non-orientable, then $\mathrm{Aut}S$ is finite.

Similarly, two s-manifolds $\mathcal{C}_1(T, n)$ and $\mathcal{C}_2(T, n)$ are called to be *isomorphic* if there is an $1-1$ mapping $\tau : \mathcal{C}_1(T, n) \to \mathcal{C}_2(T, n)$ such that for $\forall T_1, T_2 \in \mathcal{C}_1(T, n)$,

$$\tau(T_1 \bigcap T_2) = \tau(T_1) \bigcap \tau(T_2).$$

If $\mathcal{C}_1(T, n) = \mathcal{C}_1(T, n) = \mathcal{C}(T, n)$, τ is called an *automorphism* of the s-manifold $\mathcal{C}(T, n)$. All automorphisms of an s-manifold form a group under the composition operation, called the automorphism group of an s-manifold $\mathcal{C}(T, n)$, denoted by $\mathrm{Aut}\mathcal{C}(T, n)$.

§2. Map and embedding of a graph on surface

2.1 Graphs

Combinatorially, a *graph* Γ is a 2-tuple (V, E) consists of a finite non-empty set V of vertices together with a set E of unordered pairs of vertices, i.e., $E \subseteq$

$V \times V$([22], [35], [70]). Often denoted by $V(\Gamma)$, $E(\Gamma)$ the vertex set and edge set of the graph Γ.

The cardinal numbers of $|V|$ and $|E|$ are called the *order* and the *size* of the graph Γ.

We can also obtain a representation of a graph Γ representing a vertex u by a point $p(u)$, $p(u) \neq p(v)$ if $u \neq v$ and an edge (u, v) by a curve connecting the points $p(u)$ and $p(v)$ on the plane.

For example, the graph in the Fig. 1.1

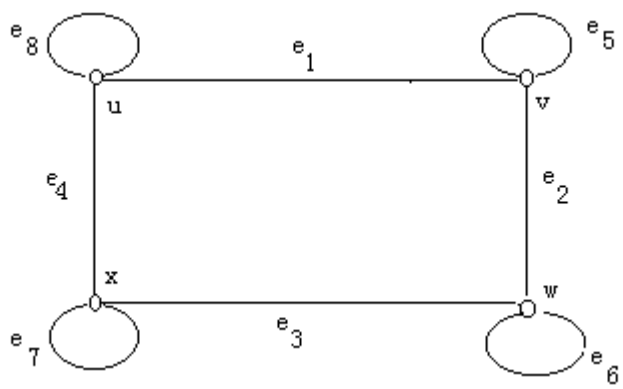

Fig 1.1

is a graph $\Gamma = (V, E)$ with $V = \{u, v, w, x\}$ and

$$E = \{(u, u), (v, v), (w, w), (x, x), (u, v), (v, w), (w, x), (x, u)\}.$$

A *walk* of a graph Γ is an alternating sequence of vertices and edges $u_1, e_1, u_2, e_2, \cdots, e_n, u_{n_1}$ with $e_i = (u_i, u_{i+1})$ for $1 \leq i \leq n$. The number n is the length of the walk. If $u_1 = u_{n+1}$, the walk is said to be *closed*, and *open* otherwise. For example, $ue_1ve_2we_6we_3xe_3we_2v$ is a walk in the graph of the Fig. 1.1. A walk is called a *trail* if all its edges are distinct and a *path* if all the vertices are distinct. A closed path is said to be a circuit.

A graph Γ is *connected* if there is paths connecting any two vertices in this graph and is *simple* if any 2-tuple $(u, v) \in E(\Gamma) \subseteq V(\Gamma) \times V(\Gamma)$ appears once at most and $u \neq v$.

Let Γ be a graph. For $\forall u \in V(\Gamma)$, the neighborhood $N_\Gamma^v(u)$ is defined by $N_\Gamma^v(u) = \{v | (u, v) \text{ or } (v, u) \in E(\Gamma)\}$. Its cardinal $|N_\Gamma^v(u)|$ is called the valency of the

vertex u in the graph Γ, denoted by $\rho_\Gamma(u)$. By the enumeration of edges, we know the following result

$$\sum u \in V(\Gamma)\rho_\Gamma(u) = 2|E(\Gamma)|.$$

2.2 **The embedding of a graph on surfaces**

A map on a surface S is a kind of partition S which enables us to obtain homeomorphisms of 2-cells $\{(x,y)|x^2+y^2 < 1, x, y \in \mathcal{R}\}$ if we remove from S all the curves used to partite S. There is a classical result for the partition of a surface gotten by T.Radó in 1925.

Theorem 1.2.1([52]) *For any compact surface S, there exist a triangulation $\{\mathcal{T}_i, i \geq 1\}$ on S.*

This theorem is fundamental for the topological graph theory, which enables us to discussion a surface combinatorially.

For any connected graph $\Gamma = (V(\Gamma), E(\Gamma))$ and a surface S, an *embedding* of the graph Γ in the surface S is geometrical defined to be a continuous $1-1$ mapping $\tau : \Gamma \to S$. The image $\tau(\Gamma)$ is contained in the 1-skeleton of a triangulation of the surface S. If each component in $S - \tau(\Gamma)$ homeomorphic to an open disk, then the embedding is said a 2-cell embedding, where, components in $S - \tau(\Gamma)$ are called faces. All embeddings considered in this book are 2-cell embeddings.

Let Γ be a graph. For $v \in V(\Gamma)$, denote by $N^e_\Gamma(v) = \{e_1, e_2, \cdots, e_{\rho(v)}\}$ all the edges incident with the vertex v. A permutation on $e_1, e_2, \cdots, e_{\rho(v)}$ is said a *pure rotation*. All pure rotations incident a vertex v is denoted by $\varrho(v)$. A *pure rotation system* of the graph Γ is defined to be

$$\rho(\Gamma) = \{\varrho(v)|v \in V(\Gamma)\}$$

and all pure rotation systems of the graph Γ is denoted by $\varrho(\Gamma)$.

The first characteristic for embedding of a graph on orientable surfaces is found by Heffter in 1891 and formulated by Edmonds in 1962, states as follows.

Theorem 1.2.2([17]) *Every pure rotation system for a graph Γ induces a unique*

embedding of Γ *into an orientable surface. Conversely, every embedding of a graph* Γ *into an orientable surface induces a unique pure rotation system of* Γ.

According to this theorem, we know that the number of orientable embeddings of a graph Γ is $\prod_{v\in V(\Gamma)}(\rho(v)-1)!$.

The characteristic for embedding of a graph on locally orientable surface is used by Ringel in the 1950s and gave a formal proof by Stahl in 1978([22][62]).

From the topological theory, embedded vertex and face can be viewed as disk, and an embedded edge can be viewed as an 1-band which is defined as a topological space B together with a homeomorphism $h : I \times I \to B$, where $I = [0, 1]$, the unit interval.

Define a rotation system $\rho^L(\Gamma)$ to be a pair $(\mathcal{J}, \lambda)$, where $\mathcal{J}$ is a pure rotation system of Γ, and $\lambda : E(\Gamma) \to Z_2$. The edge with $\lambda(e) = 0$ or $\lambda(e) = 1$ is called *type* 0 or *type* 1 edge, respectively. The *rotation system* of a graph Γ are defined by

$$\varrho^L(\Gamma) = \{(\mathcal{J}, \lambda)|\mathcal{J} \in \varrho(\Gamma), \lambda : E(\Gamma) \to Z_2\}.$$

Then we know that

Theorem 1.2.3([22][62]) *Every rotation system on a graph* Γ *defines a unique locally orientable embedding of* $\Gamma \to S$. *Conversely, every embedding of a graph* $\Gamma \to S$ *defines a rotation system for* Γ.

For any embedding of the graph Γ, there is a spanning tree T such that every edge on this tree is type 0([43]). Whence the number of embeddings of a graph Γ on locally orientable surfaces is

$$2^{\beta(\Gamma)} \prod_{v\in V(\Gamma)} (\rho(v) - 1)!$$

and the number of embeddings of Γ on the non-orientable surfaces is

$$(2^{\beta(\Gamma)} - 1) \prod_{v\in V(\Gamma)} (\rho(v) - 1)!.$$

The following result is the *Euler-Poincaré* formula for an embedding of a graph on surface.

Theorem 1.2.4 *If a graph* Γ *can be embedded into a surface* S, *then*

$$\nu(\Gamma) - \varepsilon(\Gamma) + \phi(\Gamma) = \chi(S),$$

where, $\nu(\Gamma), \varepsilon(\Gamma)$ *and* $\phi(\Gamma)$ *are the order, size and the number of faces of the graph* Γ*, and* $\chi(S)$ *is the Euler characteristic of the surface* S*:*

$$\chi(S) = \begin{cases} 2-2p, & if\ S\ is\ orientable, \\ 2-q, & if\ S\ is\ non-orientable. \end{cases}$$

2.3. **Map and rooted map on surface**

In 1973, Tutte gave an algebraic representation for an embedding of a graph on locally orientable surface ([66], which transfer a geometrical partition of a surface to a kind of permutation in algebra.

According to the summary in [33], a *map* $M = (\mathcal{X}_{\alpha,\beta}, \mathcal{P})$ is defined to be a basic permutation $\mathcal{P}$, i.e, for any $x \in \mathcal{X}_{\alpha,\beta}$, no integer k exists such that $\mathcal{P}^k x = \alpha x$, acting on $\mathcal{X}_{\alpha,\beta}$, the disjoint union of *quadricells* Kx of $x \in X$ (the base set), where $K = \{1, \alpha, \beta, \alpha\beta\}$ is the *Klein group*, satisfying the following two conditions:

(Ci) $\alpha\mathcal{P} = \mathcal{P}^{-1}\alpha$*;*

(Cii) the group $\Psi_J =< \alpha, \beta, \mathcal{P} >$ *is transitive on* $\mathcal{X}_{\alpha,\beta}$*.*

For a given map $M = (\mathcal{X}_{\alpha,\beta}, \mathcal{P})$, it can be shown that $M^* = (\mathcal{X}_{\beta,\alpha}, \mathcal{P}\alpha\beta)$ is also a map, call it the *dual* of the map M. The vertices of M are defined as the pairs of conjugatcy orbits of $\mathcal{P}$ action on $\mathcal{X}_{\alpha,\beta}$ by the condition (Ci) and edges the orbits of K on $\mathcal{X}_{\alpha,\beta}$, for example,$\forall x \in \mathcal{X}_{\alpha,\beta}$, $\{x, \alpha x, \beta x, \alpha\beta x\}$ is an edge of the map M. Define the faces of M to be the vertices in the dual map M^*. Then the Euler characteristic $\chi(M)$ of the map M is

$$\chi(M) = \nu(M) - \varepsilon(M) + \phi(M)$$

where,$\nu(M), \varepsilon(M), \phi(M)$ are the number of vertices, edges and faces of the map M, respectively.

For example, the graph K_4 on the tours with one face length 4 and another 8 , shown in the Fig. 1.2, can be algebraic represented as follows:

A map $(\mathcal{X}_{\alpha,\beta}, \mathcal{P})$ with $\mathcal{X}_{\alpha,\beta} = \{x, y, z, u, v, w, \alpha x, \alpha y, \alpha z, \alpha u, \alpha v, \alpha w, \beta x, \beta y, \beta z, \beta u, \beta v, \beta w, \alpha\beta x, \alpha\beta y, \alpha\beta z, \alpha\beta u, \alpha\beta v, \alpha\beta w\}$ and

$$\begin{aligned} \mathcal{P} &= (x, y, z)(\alpha\beta x, u, w)(\alpha\beta z, \alpha\beta u, v)(\alpha\beta y, \alpha\beta v, \alpha\beta w) \\ &\times (\alpha x, \alpha z, \alpha y)(\beta x, \alpha w, \alpha u)(\beta z, \alpha v, \beta u)(\beta y, \beta w, \beta v) \end{aligned}$$

The four vertices of this map are $\{(x, y, z), (\alpha x, \alpha z, \alpha y)\}$, $\{(\alpha\beta x, u, w), (\beta x, \alpha w, \alpha u)\}$, $\{(\alpha\beta z, \alpha\beta u, v), (\beta z, \alpha v, \beta u)\}$ and $\{(\alpha\beta y, \alpha\beta v, \alpha\beta w), (\beta y, \beta w, \beta v)\}$ and six edges are $\{e, \alpha e, \beta e, \alpha\beta e\}$, where, $e \in \{x, y, z, u, v, w\}$. The Euler characteristic $\chi(M)$ is $\chi(M) = 4 - 6 + 2 = 0$.

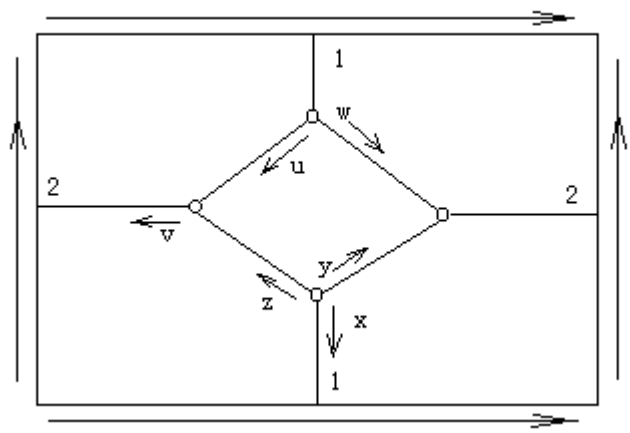

Fig 1.2

Geometrically, an embedding M of a graph Γ on a surface is a map and has an algebraic representation. The graph Γ is said the *underlying graph* of the map M and denoted by $\Gamma = \Gamma(M)$. For determining a given map $(\mathcal{X}_{\alpha,\beta}, \mathcal{P})$ is orientable or not, the following condition is needed.

(Ciii) If the group $\Psi_I =< \alpha\beta, \mathcal{P} >$ is transitive on $\mathcal{X}_{\alpha,\beta}$, then M is non-orientable. Otherwise, orientable.

It can be shown that the number of orbits of the group $\Psi_I =< \alpha\beta, \mathcal{P} >$ in the Fig.1.1 action on $\mathcal{X}_{\alpha,\beta} = \{x, y, z, u, v, w, \alpha x, \alpha y, \alpha z, \alpha u, \alpha v, \alpha w, \beta x, \beta y, \beta z, \beta u, \beta v, \beta w, \alpha\beta x, \alpha\beta y, \alpha\beta z, \alpha\beta u, \alpha\beta v, \alpha\beta w\}$ is 2. Whence, it is an orientable map and the genus of the surface is 1. Therefore, the algebraic representation is correspondent with its geometrical mean.

A *rooted map* M^x is a map M such that one quadricell $x \in \mathcal{X}_{\alpha,\beta}$ is marked beforehand, which is introduced by Tutte in the enumeration of planar maps. The importance of the root is to destroy the symmetry in a map. That is the reason why we can enumerate rooted maps on surfaces by combinatorial approaches.

2.4. Classification maps and embeddings of a graph on surfaces

2.4.1 Equivalent embeddings of a graph

From references, such as, [22], [70], etc., two embeddings $(\mathcal{J}_1, \lambda_1), (\mathcal{J}_2, \lambda_2)$ of Γ on an orientable surface S are called *equivalent* if there exists an orientation-preserving homeomorphism τ of the surface S such that $\tau : \mathcal{J}_1 \to \mathcal{J}_2$, and $\tau\lambda = \lambda\tau$. If $(\mathcal{J}_1, \lambda_1) = (\mathcal{J}_2, \lambda_2) = (\mathcal{J}, \lambda)$, then an orientation-preserving homeomorphism mapping $(\mathcal{J}_1, \lambda_1)$ to $(\mathcal{J}_2, \lambda_2)$ is called an automorphism of the embedding $(\mathcal{J}, \lambda)$. Certainly, all automorphisms of an embedding form a group, denoted by $\mathrm{Aut}(\mathcal{J}, \lambda)$.

Enumerating the non-equivalent orientable embeddings of a complete graph and a complete bipartite graph are considered by Biggs, White, Mull and Rieper et al in [6], [54] − [55]. Their approach is generalized in the following Section 2.3.2 for enumerating non-equivalent embeddings of a given graph on locally orientable surface in the view of maps on surfaces.

2.4.2 Isomorphism of maps

Two maps $M_1 = (\mathcal{X}^1_{\alpha,\beta}, \mathcal{P}_1)$ and $M_2 = (\mathcal{X}^2_{\alpha,\beta}, \mathcal{P}_2)$ are said to be *isomorphic* if there exists a bijection ξ

$$\xi : \mathcal{X}^1_{\alpha,\beta} \longrightarrow \mathcal{X}^2_{\alpha,\beta}$$

such that for $\forall x \in \mathcal{X}^1_{\alpha,\beta}$,

$$\xi\alpha(x) = \alpha\xi(x), \xi\beta(x) = \beta\xi(x) \quad \text{and} \quad \xi\mathcal{P}_1(x) = \mathcal{P}_2\xi(x).$$

Call ξ an *isomorphism* between M_1 and M_2. If $M_1 = M_2 = M$, then an isomorphism between M_1 and M_2 is called an *automorphism* of M. All automorphisms of a map M form a group, called the *automorphism group* of M and denoted by $\mathrm{Aut}M$.

Similarly, two rooted maps M_1^x, M_2^y are said to be *isomorphic* if there is an isomorphism θ between them such that $\theta(x) = y$. All automorphisms of a rooted

map M^r also form a group, denoted by $\mathrm{Aut}M^r$. It has been known that $\mathrm{Aut}M^r$ is trivial ([33]).

Using isomorphisms between maps, an alternative approach for determining equivalent embeddings of a graph on locally orientable surfaces can be gotten, which has been used in [43], [49]−[50] for determining the number of non-equivalent embeddings of a complete graph, a semi-regular graph and a Cayley graph $\Gamma = Cay(G : S)$ with $Aut\Gamma \cong R(G) \times H$, is defined as follows.

For a given map M underlying a graph Γ, it is obvious that $\mathrm{Aut}M|_\Gamma \leq \mathrm{Aut}\Gamma$. We extend the action $\forall g \in \mathrm{Aut}\Gamma$ on $V(\Gamma)$ to $\mathcal{X}_{\alpha,\beta}$, where $X = E(\Gamma)$, as follows:

$\forall x \in \mathcal{X}_{\alpha,\beta}$, *if* $x^g = y$, *then define* $(\alpha x)^g = \alpha y, (\beta x)^g = \beta y$ *and* $(\alpha\beta x)^g = \alpha\beta y$.

Two maps (embeddings) M_1, M_2 with a given underlying graph Γ are equivalent if there exists an isomorphism ζ between them induced by an element ξ. Call ζ an equivalence between M_1, M_2. Certainly, on an orientable surface, an equivalence preserve the orientation on this surface.

Theorem 1.2.5 *Let* $M = (\mathcal{X}_{\alpha,\beta}, \mathcal{P})$ *be a map with an underlying graph* Γ, $\forall g \in Aut\Gamma$. *Then the extend action of* g *on* $\mathcal{X}_{\alpha,\beta}$ *with* $X = E(\Gamma)$ *is an automorphism of map* M *iff* $\forall v \in V(M)$, g *preserves the cyclic order of* v.

Proof Assume that $\zeta \in AutM$ is induced by the extend action of an automorphism g in Γ, $u, v \in V(M)$ and $u^g = v$. Not loss of the generality, we assume that

$$u = (x_1, x_2, \cdots, x_{\rho(u)})(\alpha x_{\rho(u)}, \cdots, \alpha x_2, \alpha x_1)$$

$$v = (y_1, y_2, \cdots, y_{\rho(v)})(\alpha y_{\rho(v)}, \cdots, \alpha y_2, \alpha y_1).$$

Without loss of generality , we can assume that

$$(x_1, x_2, \cdots, x_{\rho(u)})^g = (y_1, y_2, \cdots, y_{\rho(v)}),$$

that is,

$$(g(x_1), g(x_2), \cdots, g(x_{\rho(u)})) = (y_1, y_2, \cdots, y_{\rho(v)}).$$

Whence, g preserves the cyclic order of vertices in the map M.

On the other hand, if the extend action of $g \in Aut\Gamma$ on $\mathcal{X}_{\alpha,\beta}$ preserves the cyclic order of each vertex in M, i.e., $\forall u \in V(\Gamma), \exists v \in V(\Gamma)$ such that $u^g = v$. Assume that

$$\mathcal{P} = \prod_{u \in V(M)} u.$$

Then

$$\mathcal{P}^g = \prod_{u \in V(M)} u^g = \prod_{v \in V(M)} v = \mathcal{P}.$$

Therefore, the extend action of g on $\mathcal{X}_{\alpha,\beta}$ is an automorphism of the map M. $\natural$

2.5 **Maps as a combinatorial model of Klein surfaces and s-manifolds**

2.5.1 The model of Klein surfaces

Given a complex algebraic curve, it is a very important problem to determine its birational automorphisms. For curve $\mathcal{C}$ of genus $g \geq 2$, Schwarz proved that $\mathrm{Aut}(\mathcal{C})$ is finite in 1879 and Hurwitz proved $|Aut(\mathcal{C})| \leq 84(g-1)$(see [18]). As observed by Riemann, groups of birational automorphisms of complex algebraic curves are the same as the automorphism groups of the compact Riemann surfaces. The latter can be combinatorially dealt with the approach of maps.

Theorem 1.2.6([8][29]) *If M is an orientable map of genus p, then* $\mathrm{Aut}M$ *is isomorphic to a group of conformal transformations of a Riemann surface of genus p.*

According to the Theorem 1.1.2, the automorphism group of a Klein surface has the same form as a Riemann surface. Similar to the proof of the Theorem 5.6 in [29], we can get a result similar to the Theorem 1.2.6 for Klein surfaces.

Theorem 1.2.7 *If M is a locally orientable map of genus q, then* $\mathrm{Aut}M$ *is isomorphic to a group of conformal transformations of a Klein surface of genus q.*

Proof By a result in [8], $\mathrm{Aut}M \cong N_T(A)/A$, Where $T =< a, b, c | a^2 = b^2 = c^2 = (ba)^2 = (ac)^m = (cb)^n = 1 >$, $A \leq T$ and T can be realized by an automorphism group of a tessellation on the upper plane, A a NEC subgroup. According to the

Theorem 1.1.2, The underlying surface S of M has $S = H/A$ with $\Omega = \mathrm{Aut}H = PGL(2, \mathcal{R})$ being the automorphism group of the upper half plane H. Since $T \leq \Omega$, we know that $\mathrm{Aut}M \cong N_T(A)/A \leq N_\Omega(A)/A$, isomorphic to a group of conformal transformations of the Klein surface $S = H/G$. $\natural$

2.5.2 The model of closed s-manifolds

For a closed s-manifold $\mathcal{C}(T, n)$, we can define a map M by $V(M) = \{$the vertices in $\mathcal{C}(T, n)\}$, $E(M) = \{$the edges in $\mathcal{C}(T, n)\}$ and $F(M) = \{T, T \in \mathcal{C}(T, n)\}$. Then, M is a triangular map with vertex valency $\in \{5, 6, 7\}$. On the other hand, if M is a triangular map on surface with vertex valency $\in \{5, 6, 7\}$, we can define $\mathcal{C}(T, \phi(M))$ by

$$\mathcal{C}(T, \phi(M)) = \{f | f \in F(M)\}.$$

Then, $\mathcal{C}(T, \phi(M))$ is an s-manifold. Therefore, we get the following result.

Theorem 1.2.8 *Let $\mathcal{C}(\widehat{T, n})$, $\mathcal{M}(T, n)$ and $\mathcal{M}^*(T, n)$ be the set of s-manifolds with n triangular disks, triangular maps with n faces and vertex valency $\in \{5, 6, 7\}$ and cubic maps of order n with face valency $\in \{5, 6, 7\}$. Then*

(i) There is a bijection between $\mathcal{M}(T, n)$ and $\mathcal{C}(\widehat{T, n})$;

(ii) There is also a bijection between $\mathcal{M}^*(T, n)$ and $\mathcal{C}(\widehat{T, n})$.

§3. The semi-arc automorphism group of a graph with application to maps enumeration

3.1 The semi-arc automorphism group of a graph

Let Γ be a graph with vertex set $V(\Gamma)$ and edge set $E(\Gamma)$. By the definition, an *automorphism* of Γ on $V(\Gamma) \bigcup E(\Gamma)$ is an $1-1$ mapping (ξ, η) on Γ such that

$$\xi : V(\Gamma) \to V(\Gamma), \quad \eta : E(\Gamma) \to E(\Gamma),$$

satisfying that for any incident elements e, f, $(\xi, \eta)(e)$ and $(\xi, \eta)(f)$ are also incident. Certainly, all automorphisms of a graph Γ form a group, denoted by $\mathrm{Aut}\Gamma$.

Now an edge $e = uv \in E(\Gamma)$ can be divided into two *semi-arcs* e_u, e_v. Call u the *root vertex* in the semi-arc e_u. Two semi-arc e_u, f_v are said *incident* if $u = v$ or $e = f$. The set of all semi-arcs of a graph Γ is denoted by $X_{\frac{1}{2}}(\Gamma)$. A semi-arc automorphism of a graph, first appeared in [43] and then applied to the enumeration rooted maps on surfaces underlying a graph Γ in [46], is defined as follows.

Definition 1.3.1 *An* $1-1$ *mapping* ξ *on* $X_{\frac{1}{2}}(\Gamma)$ *such that* $\forall e_u, f_v \in X_{\frac{1}{2}}(\Gamma)$, $\xi(e_u)$ *and* $\xi(f_v)$ *are incident if* e_u *and* f_v *are incident, is called a semi-arc automorphism of the graph* Γ.

All semi-arc automorphisms of a graph also form a group under the composition operation, denoted by $\mathrm{Aut}_{\frac{1}{2}}\Gamma$, which is more important for the enumeration of maps on surfaces underlying a graph and by the discussion of the Section 2, which is also important for determine the conformal transformations on a Klein surface. The following table lists semi-arc automorphism groups of some well-known graphs, which give us some useful information for the semi-arc automorphism groups, for example, $\mathrm{Aut}_{\frac{1}{2}}K_n = S_n$ but $\mathrm{Aut}_{\frac{1}{2}}B_n = S_n[S_2] \neq \mathrm{Aut}B_n$.

Γ	$Aut_{\frac{1}{2}}\Gamma$	*order*
K_n	S_n	$n!$
$K_{m,n}(m \neq n)$	$S_m \times S_n$	$m!n!$
$K_{n,n}$	$S_2[S_n]$	$2n!^2$
B_n	$S_n[S_2]$	$2^n n!$
Dp_n	$S_2 \times S_n$	$2n!$
$Dp_n^{k,l}(k \neq l)$	$S_2[S_k] \times S_n \times S_2[S_l]$	$2^{k+l}n!k!l!$
$Dp_n^{k,k}$	$S_2 \times S_n \times (S_2[S_k])^2$	$2^{2k+1}n!k!^2$

table 3.1

Here, Dp_n is a dipole graph with 2 vertices, n multiple edges and $Dp_n^{k,l}$ is a generalized dipole graph with 2 vertices, n multiple edges, and one vertex with k bouquets and another, l bouquets. Comparing the semi-arc automorphism groups in the second column with automorphism groups of graphs in the first column in table 3.1, it is easy to note that the semi-arc automorphism group are the same as the automorphism group in the first two cases. In fact, it is so by the following Theorem 1.3.1.

For $\forall g \in \mathrm{Aut}\Gamma$, there is also an induced action $g|^{\frac{1}{2}}$ on $X_{\frac{1}{2}}(\Gamma)$, $g : X_{\frac{1}{2}}(\Gamma) \to X_{\frac{1}{2}}(\Gamma)$, as follows:

$$\forall e_u \in X_{\frac{1}{2}}(\Gamma), g(e_u) = (g(e)_{g(u)}.$$

All induced action of the elements in $\mathrm{Aut}\Gamma$ on $X_{\frac{1}{2}}(\Gamma)$ is denoted by $\mathrm{Aut}\Gamma|^{\frac{1}{2}}$. Notice that

$$\mathrm{Aut}\Gamma \cong \mathrm{Aut}\Gamma|^{\frac{1}{2}}.$$

We have the following result.

Theorem 1.3.1 *For a graph* Γ *without loops,*

$$\mathrm{Aut}_{\frac{1}{2}}\Gamma = \mathrm{Aut}\Gamma|^{\frac{1}{2}}.$$

Proof By the definition, we only need to prove that for $\forall \xi_{\frac{1}{2}} \in \mathrm{Aut}_{\frac{1}{2}}\Gamma$, $\xi = \xi_{\frac{1}{2}}|_\Gamma \in \mathrm{Aut}\Gamma$ and $\xi_{\frac{1}{2}} = \xi|^{\frac{1}{2}}$. In fact, for any $\forall e_u, f_x \in X_{\frac{1}{2}}(\Gamma)$, where, $e = uv \in E(\Gamma)$ and $f = xy \in E(\Gamma)$, if

$$\xi_{\frac{1}{2}}(e_u) = f_x,$$

then by the definition, we know that

$$\xi_{\frac{1}{2}}(e_v) = f_y.$$

Whence, $\xi_{\frac{1}{2}}(e) = f$. That is, $\xi_{\frac{1}{2}}|_\Gamma \in \mathrm{Aut}\Gamma$.

Now since there is not a loop in Γ, we know that $\xi_{\frac{1}{2}}|_\Gamma = \mathbf{id}_\Gamma$ if and only if $\xi_{\frac{1}{2}} = \mathbf{id}_\Gamma$. Therefore, $\xi_{\frac{1}{2}}$ is induced by $\xi_{\frac{1}{2}}|_\Gamma$ on $X_{\frac{1}{2}}(\Gamma)$, that is,

$$\mathrm{Aut}_{\frac{1}{2}}\Gamma = \mathrm{Aut}\Gamma|^{\frac{1}{2}}. \quad \natural$$

Notice that for a given graph Γ, $X_{\frac{1}{2}}(\Gamma) = \mathcal{X}_\beta$, if we equal e_u to e and e_v to βe for an edge $e = uv \in E(\Gamma)$.

For a given map $M = (\mathcal{X}_{\alpha,\beta}, \mathcal{P})$ underlying a graph Γ, we have known that $\mathrm{Aut}M|_\Gamma \leq \mathrm{Aut}\Gamma$, which made us to extend the action of an automorphism g of

the graph Γ on $\mathcal{X}_{\alpha,\beta}$ with $X = E(\Gamma)$ to get automorphisms of a map induced by automorphisms of its underlying graph. More detail, we can get the following result.

Theorem 1.3.2 *Two maps $M_1 = (\mathcal{X}_{\alpha,\beta}, \mathcal{P}_1)$ and $M_2 = (\mathcal{X}_{\alpha,\beta}, \mathcal{P}_2)$ underlying a graph Γ are*

(i) equivalent iff there is an element $\zeta \in \mathrm{Aut}_{\frac{1}{2}}\Gamma$ such that $\mathcal{P}_1^{\zeta} = \mathcal{P}_2$ and

(ii)isomorphic iff there is an element $\zeta \in \mathrm{Aut}_{\frac{1}{2}}\Gamma$ such that $\mathcal{P}_1^{\zeta} = \mathcal{P}_2$ or $\mathcal{P}_1^{\zeta} = \mathcal{P}_2^{-1}$.

Proof By the definition of equivalence between maps, if κ is an equivalence between M_1 and M_2, then κ is an isomorphism between M_1 and M_2 induced by an automorphism $\iota \in \mathrm{Aut}\Gamma$. Notice that

$$\mathrm{Aut}\Gamma \cong \mathrm{Aut}\Gamma|^{\frac{1}{2}} \leq \mathrm{Aut}_{\frac{1}{2}}\Gamma.$$

Whence, we know that $\iota \in \mathrm{Aut}_{\frac{1}{2}}\Gamma$.

Now if there is a $\zeta \in \mathrm{Aut}_{\frac{1}{2}}\Gamma$ such that $\mathcal{P}_1^{\zeta} = \mathcal{P}_2$, then $\forall e_x \in X_{\frac{1}{2}}(\Gamma)$, $\zeta(e_x) = \zeta(e)_{\zeta(x)}$. Now assume that $e = (x, y) \in E(\Gamma)$, then by our convention, we know that if $e_x = e \in \mathcal{X}_{\alpha,\beta}$, then $e_y = \beta e$. Now by the definition of an automorphism on the semi-arc set $X_{\frac{1}{2}}(\Gamma)$, if $\zeta(e_x) = f_u$, where $f = (u, v)$, then there must be $\zeta(e_y) = f_v$. Notice that $X_{\frac{1}{2}}(\Gamma) = \mathcal{X}_{\beta}$. We know that $\zeta(e_y) = \zeta(\beta e) = \beta f = f_v$. We can also extend the action of ζ on $X_{\frac{1}{2}}(\Gamma)$ to $\mathcal{X}_{\alpha,\beta}$ by $\zeta(\alpha e) = \alpha\zeta(e)$. Whence, we know that $\forall e \in \mathcal{X}_{\alpha,\beta}$,

$$\alpha\zeta(e) = \zeta\alpha(e),\ \beta\zeta(e) = \zeta\beta(e) \text{ and } \mathcal{P}_1^{\zeta}(e) = \mathcal{P}_2(e).$$

Therefore, the extend action of ζ on $\mathcal{X}_{\alpha,\beta}$ is an isomorphism between the map M_1 and M_2. Whence, ζ is an equivalence between the map M_1 and M_2. So the assertion in (i) is true.

For the assertion in (ii), if there is an element $\zeta \in \mathrm{Aut}_{\frac{1}{2}}\Gamma$ such that $\mathcal{P}_1^{\zeta} = \mathcal{P}_2$, then the map M_1 is isomorphic to M_2. If $\mathcal{P}_1^{\zeta} = \mathcal{P}_2^{-1}$, then $\mathcal{P}_1^{\zeta\alpha} = \mathcal{P}_2$. The map M_1 is also isomorphic to M_2. This is the sufficiency of (ii).

By the definition of an isomorphism ξ between maps M_1 and M_2, we know that $\forall x \in \mathcal{X}_{\alpha,\beta}$,

$$\alpha\xi(x) = \xi\alpha(x),\ \beta\xi(x) = \xi\beta(x) \text{ and } \mathcal{P}_1^{\xi}(x) = \mathcal{P}_2(x).$$

By the convention, the condition

$$\beta\xi(x) = \xi\beta(x) \text{ and } \mathcal{P}_1^{\xi}(x) = \mathcal{P}_2(x).$$

is just the condition of an automorphism ξ or $\alpha\xi$ on $X_{\frac{1}{2}}(\Gamma)$. Whence, the assertion in (ii) is also true. $\natural$

3.2 **A scheme for enumerating maps underlying a graph**

For a given graph Γ, denoted by $\mathcal{E}^O(\Gamma), \mathcal{E}^N(\Gamma)$ and $\mathcal{E}^L(\Gamma)$ the sets of embeddings of Γ on the orientable surfaces, on the non-orientable surfaces and on the locally orientable surfaces, respectively. For determining the number of non-equivalent embeddings of a graph on surfaces and non-isomorphic unrooted maps underlying a graph, another form of the Theorem 1.3.2 using the group action idea is need, which is stated as follows.

Theorem 1.3.3 *For two maps $M_1 = (\mathcal{X}_{\alpha,\beta}, \mathcal{P}_1)$ and $M_2 = (\mathcal{X}_{\alpha,\beta}, \mathcal{P}_2)$ underlying a graph Γ, then*

(i) M_1, M_2 are equivalent iff M_1, M_2 are in one orbits of $\mathrm{Aut}_{\frac{1}{2}}\Gamma$ action on $X_{\frac{1}{2}}(\Gamma)$;

(ii) M_1, M_2 are isomorphic iff M_1, M_2 are in one orbits of $\mathrm{Aut}_{\frac{1}{2}}\Gamma\times < \alpha >$ action on $\mathcal{X}_{\alpha,\beta}$.

Now we can established a scheme for enumerating the number of non-isomorphic unrooted maps and non-equivalent embeddings in a given set of embeddings of a graph on surfaces by using the *Burnside Lemma* as the following.

Theorem 1.3.4 *For a given graph Γ, let $\mathcal{E} \subset \mathcal{E}^L(\Gamma)$, then the numbers $n(\mathcal{E}, \Gamma)$ and $\eta(\mathcal{E}, \Gamma)$ of non-isomorphic unrooted maps and non-equivalent embeddings in $\mathcal{E}$ are respective*

$$n(\mathcal{E}, \Gamma) = \frac{1}{2|\mathrm{Aut}_{\frac{1}{2}}\Gamma|} \sum_{g \in \mathrm{Aut}_{\frac{1}{2}}\Gamma} |\Phi_1(g)|,$$

where, $\Phi_1(g) = \{\mathcal{P} | \mathcal{P} \in \mathcal{E}$ and $\mathcal{P}^g = \mathcal{P}$ or $\mathcal{P}^{g\alpha} = \mathcal{P}\}$ and

$$\eta(\mathcal{E},\Gamma)=\frac{1}{|\mathrm{Aut}_{\frac{1}{2}}\Gamma|}\sum_{g\in\mathrm{Aut}_{\frac{1}{2}}\Gamma}|\Phi_2(g)|,$$

where, $\Phi_2(g)=\{\mathcal{P}|\mathcal{P}\in\mathcal{E}$ *and* $\mathcal{P}^g=\mathcal{P}\}$.

Proof Define the group $\mathcal{H}=\mathrm{Aut}_{\frac{1}{2}}\Gamma\times<\alpha>$. Then by the Burnside Lemma and the Theorem 1.3.3, we get that

$$n(\mathcal{E},\Gamma)=\frac{1}{|\mathcal{H}|}\sum_{g\in\mathcal{H}}|\Phi_1(g)|,$$

where, $\Phi_1(g)=\{\mathcal{P}|\mathcal{P}\in\mathcal{E}$ and $\mathcal{P}^g=\mathcal{P}\}$. Now $|\mathcal{H}|=2|\mathrm{Aut}_{\frac{1}{2}}\Gamma|$. Notice that if $\mathcal{P}^g=\mathcal{P}$, then $\mathcal{P}^{g\alpha}\neq\mathcal{P}$, and if $\mathcal{P}^{g\alpha}=\mathcal{P}$, then $\mathcal{P}^g\neq\mathcal{P}$. Whence, $\Phi_1(g)\bigcap\Phi_1(g\alpha)=\emptyset$. We have that

$$n(\mathcal{E},\Gamma)=\frac{1}{2|\mathrm{Aut}_{\frac{1}{2}}\Gamma|}\sum_{g\in\mathrm{Aut}_{\frac{1}{2}}\Gamma}|\Phi_1(g)|,$$

where, $\Phi_1(g)=\{\mathcal{P}|\mathcal{P}\in\mathcal{E}$ and $\mathcal{P}^g=\mathcal{P}$ or $\mathcal{P}^{g\alpha}=\mathcal{P}\}$.

A similar proof enables us to obtain that

$$\eta(\mathcal{E},\Gamma)=\frac{1}{|\mathrm{Aut}_{\frac{1}{2}}\Gamma|}\sum_{g\in\mathrm{Aut}_{\frac{1}{2}}\Gamma}|\Phi_2(g)|,$$

where, $\Phi_2(g)=\{\mathcal{P}|\mathcal{P}\in\mathcal{E}$ *and* $\mathcal{P}^g=\mathcal{P}\}$. $\natural$

From the Theorem 1.3.4, we get the following results.

Corollary 1.3.1 *The numbers* $n^O(\Gamma),n^N(\Gamma)$ *and* $n^L(\Gamma)$ *of non-isomorphic unrooted orientable maps ,non-orientable maps and locally orientable maps underlying a graph* Γ *are respective*

$$n^O(\Gamma)=\frac{1}{2|\mathrm{Aut}_{\frac{1}{2}}\Gamma|}\sum_{g\in\mathrm{Aut}_{\frac{1}{2}}\Gamma}|\Phi_1^O(g)|;\qquad(1.3.1)$$

$$n^N(\Gamma)=\frac{1}{2|\mathrm{Aut}_{\frac{1}{2}}\Gamma|}\sum_{g\in\mathrm{Aut}_{\frac{1}{2}}\Gamma}|\Phi_1^N(g)|;\qquad(1.3.2)$$

$$n^L(\Gamma)=\frac{1}{2|\mathrm{Aut}_{\frac{1}{2}}\Gamma|}\sum_{g\in\mathrm{Aut}_{\frac{1}{2}}\Gamma}|\Phi_1^L(g)|,\qquad(1.3.3)$$

where, $\Phi_1^O(g) = \{\mathcal{P}|\mathcal{P} \in \mathcal{E}^O(\Gamma)$ *and* $\mathcal{P}^g = \mathcal{P}$ *or* $\mathcal{P}^{g\alpha} = \mathcal{P}\}$, $\Phi_1^N(g) = \{\mathcal{P}|\mathcal{P} \in \mathcal{E}^N(\Gamma)$ *and* $\mathcal{P}^g = \mathcal{P}$ *or* $\mathcal{P}^{g\alpha} = \mathcal{P}\}$, $\Phi_1^L(g) = \{\mathcal{P}|\mathcal{P} \in \mathcal{E}^L(\Gamma)$ *and* $\mathcal{P}^g = \mathcal{P}$ *or* $\mathcal{P}^{g\alpha} = \mathcal{P}\}$.

Corollary 1.3.2 *The numbers* $\eta^O(\Gamma), \eta^N(\Gamma)$ *and* $\eta^L(\Gamma)$ *of non-equivalent embeddings of a graph* Γ *on orientable ,non-orientable and locally orientable surfaces are respective*

$$\eta^O(\Gamma) = \frac{1}{|\mathrm{Aut}_{\frac{1}{2}}\Gamma|} \sum_{g \in \mathrm{Aut}_{\frac{1}{2}}\Gamma} |\Phi_2^O(g)|; \qquad (1.3.4)$$

$$\eta^N(\Gamma) = \frac{1}{|\mathrm{Aut}_{\frac{1}{2}}\Gamma|} \sum_{g \in \mathrm{Aut}_{\frac{1}{2}}\Gamma} |\Phi_2^N(g)|; \qquad (1.3.5)$$

$$\eta^L(\Gamma) = \frac{1}{|\mathrm{Aut}_{\frac{1}{2}}\Gamma|} \sum_{g \in \mathrm{Aut}_{\frac{1}{2}}\Gamma} |\Phi_2^L(g)|, \qquad (1.3.6)$$

where, $\Phi_2^O(g) = \{\mathcal{P}|\mathcal{P} \in \mathcal{E}^O(\Gamma)$ *and* $\mathcal{P}^g = \mathcal{P}\}$, $\Phi_2^N(g) = \{\mathcal{P}|\mathcal{P} \in \mathcal{E}^N(\Gamma)$ *and* $\mathcal{P}^g = \mathcal{P}\}$, $\Phi_2^L(g) = \{\mathcal{P}|\mathcal{P} \in \mathcal{E}^L(\Gamma)$ *and* $\mathcal{P}^g = \mathcal{P}\}$.

For a simple graph Γ, since $\mathrm{Aut}_{\frac{1}{2}}\Gamma = \mathrm{Aut}\Gamma$ by the Theorem 1.3.1, the formula (1.3.4) is just the scheme used for counting the non-equivalent embeddings of a complete graph, a complete bipartite graph in the references [6], [54] – [55], [70]. For an *asymmetric graph* Γ, that is, $\mathrm{Aut}_{\frac{1}{2}}\Gamma = \mathbf{id}_\Gamma$, we get the numbers of non-isomorphic maps underlying a graph Γ and the numbers of non-equivalent embeddings of the graph Γ by the Corollary 1.3.1 and 1.3.2 as follows.

Theorem 1.3.5 *The numbers* $n^O(\Gamma)$, $n^N(\Gamma)$ *and* $n^L(\Gamma)$ *of non-isomorphic unrooted maps on orientable, non-orientable surface or locally surface with an asymmetric underlying graph* Γ *are respective*

$$n^O(\Gamma) = \frac{\prod_{v \in V(\Gamma)} (\rho(v) - 1)!}{2},$$

$$n^L(\Gamma) = 2^{\beta(\Gamma)-1} \prod_{v \in V(\Gamma)} (\rho(v) - 1)!$$

and

$$n^N(\Gamma) = (2^{\beta(\Gamma)-1} - \frac{1}{2}) \prod_{v \in V(\Gamma)} (\rho(v) - 1)!,$$

where, $\beta(\Gamma)$ is the Betti number of the graph Γ.

The numbers $\eta^O(\Gamma)$, $\eta^N(\Gamma)$ and $\eta^L(\Gamma)$ of non-equivalent embeddings of an asymmetric underlying graph Γ are respective

$$\eta^O(\Gamma) = \prod_{v \in V(\Gamma)} (\rho(v) - 1)!,$$

$$\eta^L(\Gamma) = 2^{\beta(\Gamma)} \prod_{v \in V(\Gamma)} (\rho(v) - 1)!$$

and

$$\eta^N(\Gamma) = (2^{\beta(\Gamma)} - 1) \prod_{v \in V(\Gamma)} (\rho(v) - 1)!.$$

§4. A relation among the total embeddings and rooted maps of a graph on genus

4.1 The rooted total map and embedding polynomial of a graph

For a given graph Γ with maximum valency ≥ 3, assume that $r_i(\Gamma), \widetilde{r}_i(\Gamma), i \geq 0$ are respectively the numbers of rooted maps with an underlying graph Γ on the orientable surface with genus $\gamma(\Gamma) + i - 1$ and on the non-orientable surface with genus $\widetilde{\gamma}(\Gamma) + i - 1$, where $\gamma(\Gamma)$ and $\widetilde{\gamma}(\Gamma)$ denote the minimum orientable genus and minimum non-orientable genus of the graph Γ, respectively. Define its *rooted orientable map polynomial* $r[\Gamma](x)$, *rooted non-orientable map polynomial* $\widetilde{r}[\Gamma](x)$ and *rooted total map polynomial* $R[\Gamma](x)$ on genus by:

$$r[\Gamma](x) = \sum_{i \geq 0} r_i(\Gamma) x^i,$$

$$\widetilde{r}[\Gamma](x) = \sum_{i \geq 0} \widetilde{r}_i(\Gamma) x^i$$

and

$$R[\Gamma](x) = \sum_{i\geq 0} r_i(\Gamma)x^i + \sum_{i\geq 1} \widetilde{r}_i(\Gamma)x^{-i}.$$

The total number of orientable embeddings of Γ is $\prod_{d\in D(\Gamma)}(d-1)!$ and non-orientable embeddings is $(2^{\beta(\Gamma)}-1)\prod_{d\in D(\Gamma)}(d-1)!$, where $D(\Gamma)$ is its valency sequence. Now let $g_i(\Gamma)$ and $\widetilde{g}_i(\Gamma)$, $i \geq 0$ respectively be the number of embeddings of Γ on the orientable surface with genus $\gamma(\Gamma)+i-1$ and on the non-orientable surface with genus $\widetilde{\gamma}(\Gamma)+i-1$. The *orientable genus polynomial* $g[\Gamma](x)$, *non-orientable genus polynomial* $\widetilde{g}[\Gamma](x)$ and *total genus polynomial* $G[\Gamma](x)$ of Γ are defined by

$$g[\Gamma](x) = \sum_{i\geq 0} g_i(\Gamma)x^i,$$

$$\widetilde{g}[\Gamma](x) = \sum_{i\geq 0} \widetilde{g}_i(\Gamma)x^i$$

and

$$G[\Gamma](x) = \sum_{i\geq 0} g_i(\Gamma)x^i + \sum_{i\geq 1} \widetilde{g}_i(\Gamma)x^{-i}.$$

The orientable genus polynomial $g[\Gamma](x)$ is introduced by Gross and Furst in [23], and in [19], [23]−[24], the orientable genus polynomials of a necklace, a bouquet, a closed-end ladder and a cobblestone are determined. The total genus polynomial is introduced by Chern et al. in [13], and in [31], recurrence relations for the total genus polynomial of a bouquet and a dipole are found. The rooted orientable map polynomial is introduced in [43] − [44], [47] and the rooted non-orientable map polynomial in [48]. All the polynomials $r[\Gamma](x), \widetilde{r}[\Gamma](x), R[\Gamma](x)$ and $g[\Gamma](x), \widetilde{g}[\Gamma](x), G[\Gamma](x)$ are finite by the properties of embeddings of Γ on surfaces.

Now we establish relations of $r[\Gamma](x)$ with $g[\Gamma](x)$, $\widetilde{r}[\Gamma](x)$ with $\widetilde{g}[\Gamma](x)$ and $R[\Gamma](x)$ with $G[\Gamma](x)$ as follows.

Lemma 1.4.1([25][45]) *For a given map M, the number of non-isomorphic rooted maps by rooting on M is*

$$\frac{4\varepsilon(M)}{|\mathrm{Aut}M|},$$

where $\varepsilon(M)$ is the number of edges in M.

Theorem 1.4.1 *For a given graph Γ,*

$$|\mathrm{Aut}_{\frac{1}{2}}\Gamma|\mathrm{r}[\Gamma](\mathrm{x}) = 2\varepsilon(\Gamma)\mathrm{g}[\Gamma](\mathrm{x}),$$

$$|\mathrm{Aut}_{\frac{1}{2}}\Gamma|\widetilde{\mathrm{r}}[\Gamma](\mathrm{x}) = 2\varepsilon(\Gamma)\widetilde{\mathrm{g}}[\Gamma](\mathrm{x})$$

and

$$|\mathrm{Aut}_{\frac{1}{2}}\Gamma|\mathrm{R}[\Gamma](\mathrm{x}) = 2\varepsilon(\Gamma)\mathrm{G}[\Gamma](\mathrm{x}),$$

where $\mathrm{Aut}_{\frac{1}{2}}\Gamma$ and $\varepsilon(\Gamma)$ denote the semi-arc automorphism group and the size of Γ, respectively.

Proof For an integer k, denotes by $\mathcal{M}_k(\Gamma, S)$ all the non-isomorphic unrooted maps on an orientable surface S with genus $\gamma(\Gamma) + k - 1$. According to the Lemma 1.4.1, we know that

$$\begin{aligned} r_k(\Gamma) &= \sum_{M\in\mathcal{M}_k(\Gamma,S)} \frac{4\varepsilon(M)}{|\mathrm{Aut}M|} \\ &= \frac{4\varepsilon(\Gamma)}{|\mathrm{Aut}_{\frac{1}{2}}\Gamma\times<\alpha>|} \sum_{M\in\mathcal{M}_k(\Gamma,S)} \frac{|\mathrm{Aut}_{\frac{1}{2}}\Gamma\times<\alpha>|}{|\mathrm{Aut}M|}. \end{aligned}$$

Since $|\mathrm{Aut}_{\frac{1}{2}}\Gamma\times<\alpha>| = |(\mathrm{Aut}_{\frac{1}{2}}\Gamma\times<\alpha>)_M||M^{\mathrm{Aut}_{\frac{1}{2}}\Gamma\times<\alpha>}|$ and $|(\mathrm{Aut}_{\frac{1}{2}}\Gamma\times<\alpha>)_M| = |\mathrm{Aut}M|$, we have that

$$\begin{aligned} r_k(\Gamma) &= \frac{4\varepsilon(\Gamma)}{|\mathrm{Aut}_{\frac{1}{2}}\Gamma\times<\alpha>|} \sum_{M\in\mathcal{M}_k(\Gamma,S)} |M^{\mathrm{Aut}_{\frac{1}{2}}\Gamma\times<\alpha>}| \\ &= \frac{2\varepsilon(\Gamma)g_k(\Gamma)}{|\mathrm{Aut}_{\frac{1}{2}}\Gamma|}. \end{aligned}$$

Therefore, we get that

$$|\mathrm{Aut}_{\frac{1}{2}}\Gamma|\mathrm{r}[\Gamma](\mathrm{x}) = |\mathrm{Aut}_{\frac{1}{2}}\Gamma|\sum_{\mathrm{i}\geq 0}\mathrm{r_i}(\Gamma)\mathrm{x^i}$$

$$\begin{aligned} &= \sum_{i\geq 0} |\mathrm{Aut}_{\frac{1}{2}}\Gamma| \mathrm{r_i}(\Gamma)\mathrm{x^i} \\ &= \sum_{i\geq 0} 2\varepsilon(\Gamma) g_i(\Gamma) x^i = 2\varepsilon(\Gamma) g[\Gamma](x). \end{aligned}$$

Similarly, let $\widetilde{\mathcal{M}_k}(\Gamma, \widetilde{S})$ be all the non-isomorphic unrooted maps on an non-orientable surface $\widetilde{S}$ with genus $\widetilde{\gamma}(\Gamma) + k - 1$. Similar to the proof for orientable case, we can get that

$$\begin{aligned} \widetilde{r_k}(\Gamma) &= \frac{4\varepsilon(\Gamma)}{|\mathrm{Aut}_{\frac{1}{2}}\Gamma \times <\alpha>|} \sum_{M\in\widetilde{\mathcal{M}_k}(\Gamma,\widetilde{S})} \frac{|\mathrm{Aut}_{\frac{1}{2}}\Gamma \times <\alpha>|}{|\mathrm{Aut}M|} \\ &= \frac{4\varepsilon(\Gamma)}{|\mathrm{Aut}_{\frac{1}{2}}\Gamma \times <\alpha>|} \sum_{M\in\widetilde{\mathcal{M}_k}(\Gamma,\widetilde{S})} |M^{\mathrm{Aut}_{\frac{1}{2}}\Gamma\times<\alpha>}| \\ &= \frac{2\varepsilon(\Gamma)\widetilde{g_k}(\Gamma)}{|\mathrm{Aut}_{\frac{1}{2}}\Gamma|}. \end{aligned}$$

Therefore, we also get that

$$\begin{aligned} |\mathrm{Aut}_{\frac{1}{2}}\Gamma| \tilde{\mathrm{r}}[\Gamma](\mathrm{x}) &= \sum_{i\geq 0} |\mathrm{Aut}_{\frac{1}{2}}\Gamma| \tilde{\mathrm{r}}_{\mathrm{i}}(\Gamma)\mathrm{x^i} \\ &= \sum_{i\geq 0} 2\varepsilon(\Gamma) \widetilde{g}_i(\Gamma) x^i = 2\varepsilon(\Gamma) \widetilde{g}[\Gamma](x). \end{aligned}$$

Notice that

$$R[\Gamma](x) = \sum_{i\geq 0} r_i(\Gamma) x^i + \sum_{i\geq 1} \widetilde{r}_i(\Gamma) x^{-i}$$

and

$$G[\Gamma](x) = \sum_{i\geq 0} g_i(\Gamma) x^i + \sum_{i\geq 1} \widetilde{g}_i(\Gamma) x^{-i}.$$

By the previous discussion, we know that for $k \geq 0$,

$$r_k(\Gamma) = \frac{2\varepsilon(\Gamma) g_k(\Gamma)}{|\mathrm{Aut}_{\frac{1}{2}}\Gamma|} \text{ and } \widetilde{r_k}(\Gamma) = \frac{2\varepsilon(\Gamma)\widetilde{g_k}(\Gamma)}{|\mathrm{Aut}_{\frac{1}{2}}\Gamma|}.$$

Therefore, we get that

$$\begin{aligned}
|\mathrm{Aut}_{\frac{1}{2}}\Gamma|\mathrm{R}[\Gamma](\mathrm{x}) &= |\mathrm{Aut}_{\frac{1}{2}}\Gamma|(\sum_{\mathrm{i}\geq 0}\mathrm{r_i}(\Gamma)\mathrm{x^i}+\sum_{\mathrm{i}\geq 1}\widetilde{\mathrm{r}}_{\mathrm{i}}(\Gamma)\mathrm{x}^{-\mathrm{i}}) \\
&= \sum_{i\geq 0}|\mathrm{Aut}_{\frac{1}{2}}\Gamma|\mathrm{r_i}(\Gamma)\mathrm{x^i}+\sum_{\mathrm{i}\geq 1}|\mathrm{Aut}_{\frac{1}{2}}\Gamma|\widetilde{\mathrm{r}}_{\mathrm{i}}(\Gamma)\mathrm{x}^{-\mathrm{i}} \\
&= \sum_{i\geq 0}2\varepsilon(\Gamma)g_i(\Gamma)x^i+\sum_{i\geq 0}2\varepsilon(\Gamma)\widetilde{g}_i(\Gamma)x^{-i}=2\varepsilon(\Gamma)G[\Gamma](x).
\end{aligned}$$

This completes the proof. $\natural$

Corollary 1.4.1 *Let be Γ a graph and $s\geq 0$ be an integer. If $r_s(\Gamma)$ and $g_s(\Gamma)$ are the numbers of rooted maps underlying the graph Γ and embeddings of Γ on a locally orientable surface of genus s, respectively, then*

$$|\mathrm{Aut}_{\frac{1}{2}}\Gamma|r_s(\Gamma) \;=\; 2\varepsilon(\Gamma)g_s(\Gamma).$$

4.2 **The number of rooted maps underlying a graph on genus**

The Corollary 1.4.1 in the previous section can be used to find the implicit relations among $r[\Gamma](x)$, $\widetilde{r}[\Gamma](x)$ or $R[\Gamma](x)$ if the implicit relations among $g[\Gamma](x)$, $\widetilde{g}[\Gamma](x)$ or $G[\Gamma](x)$ are known, and vice via.

Denote the variable vector $(x_1, x_2, \cdots)$ by $\underline{\mathrm{x}}$,

$$\underline{\mathrm{r}}(\Gamma)=(\cdots,\widetilde{r}_2(\Gamma),\widetilde{r}_1(\Gamma),r_0(\Gamma),r_1(\Gamma),r_2(\Gamma),\cdots),$$

$$\underline{\mathrm{g}}(\Gamma)=(\cdots,\widetilde{g}_2(\Gamma),\widetilde{g}_1(\Gamma),g_0(\Gamma),g_1(\Gamma),g_2(\Gamma),\cdots).$$

The $\underline{\mathrm{r}}(\Gamma)$ and $\underline{\mathrm{g}}(\Gamma)$ are called the *rooted map sequence* and the *embedding sequence* of the graph Γ.

Define a function $F(\underline{\mathrm{x}},\underline{\mathrm{y}})$ to be *y-linear* if it can be represented as the following form

$$F(\underline{\mathrm{x}},\underline{\mathrm{y}})=f(x_1,x_2,\cdots)\;+\;h(x_1,x_2,\cdots)\sum_{i\in I}y_i\;+\;l(x_1,x_2,\cdots)\sum_{\Lambda\in\mathcal{O}}\Lambda(\underline{\mathrm{y}}),$$

where, I denotes a subset of index and $\mathcal{O}$ a set of linear operators. Notice that $f(x_1,x_2,\cdots)=F(\underline{\mathrm{x}},\underline{0})$, where $\underline{0}=(0,0,\cdots)$. We have the following general result.

Theorem 1.4.2 *Let $\mathcal{G}$ be a graph family and $\mathcal{H} \subseteq \mathcal{G}$. If their embedding sequences $\underline{g}(\Gamma), \Gamma \in \mathcal{H}$, satisfies the equation*

$$F_{\mathcal{H}}(\underline{x}, \underline{g}(\Gamma)) = 0, \qquad (4.1)$$

then its rooted map sequences $\underline{r}(\Gamma), \Gamma \in \mathcal{H}$ satisfies the equation

$$F_{\mathcal{H}}(\underline{x}, \frac{|\mathrm{Aut}_{\frac{1}{2}}\Gamma|}{2\varepsilon(\Gamma)}\underline{r}(\Gamma)) = 0,$$

and vice via, if the rooted map sequences $\underline{r}(\Gamma), \Gamma \in \mathcal{H}$ satisfies the equation

$$F_{\mathcal{H}}(\underline{x}, \underline{r}(\Gamma)) = 0, \qquad (4.2)$$

then its embedding sequences $\underline{g}(\Gamma), \Gamma \in \mathcal{H}$ satisfies the equation

$$F_{\mathcal{H}}(\underline{x}, \frac{2\varepsilon(\Gamma)}{|\mathrm{Aut}_{\frac{1}{2}}\Gamma|}\underline{g}(\Gamma)) = 0.$$

Even more, assume the function $F(\underline{x}, \underline{y})$ is y-linear and $\frac{2\varepsilon(\Gamma)}{|\mathrm{Aut}_{\frac{1}{2}}\Gamma|}, \Gamma \in \mathcal{H}$ is a constant. If the embedding sequences $\underline{g}(\Gamma), \Gamma \in \mathcal{H}$ satisfies the equation (4.1)*, then*

$$F^{\diamond}_{\mathcal{H}}(\underline{x}, \underline{r}(\Gamma)) = 0,$$

where $F^{\diamond}_{\mathcal{H}}(\underline{x}, \underline{y}) = F(\underline{x}, \underline{y}) + (\frac{2\varepsilon(\Gamma)}{|\mathrm{Aut}_{\frac{1}{2}}\Gamma|} - 1)F(\underline{x}, \underline{0})$ and vice via, if its rooted map sequence $\underline{g}(\Gamma), \Gamma \in \mathcal{H}$ satisfies the equation (4.2)*, then*

$$F^{\star}_{\mathcal{H}}(\underline{x}, \underline{g}(\Gamma)) = 0.$$

where $F^{\star}_{\mathcal{H}} = F(\underline{x}, \underline{y}) + (\frac{|\mathrm{Aut}_{\frac{1}{2}}\Gamma|}{2\varepsilon(\Gamma)} - 1)F(\underline{x}, \underline{0})$.

Proof According to the Corollary 1.4.1 in this chapter, for any integer $s \geq o$ and $\Gamma \in \mathcal{H}$, we know that

$$|\mathrm{Aut}_{\frac{1}{2}}\Gamma| r_s(\Gamma) \ = \ 2\varepsilon(\Gamma) g_s(\Gamma).$$

Whence,

$$r_s(\Gamma) \ = \ \frac{2\varepsilon(\Gamma)}{|\mathrm{Aut}_{\frac{1}{2}}\Gamma|} \ g_s(\Gamma)$$

and

$$g_s(\Gamma) \;=\; \frac{|\mathrm{Aut}_{\frac{1}{2}}\Gamma|}{2\varepsilon(\Gamma)} r_s(\Gamma).$$

Therefore, if the embedding sequences $\underline{\mathrm{g}}(\Gamma), \Gamma \in \mathcal{H}$ satisfies the equation (4.1), then

$$F_{\mathcal{H}}(\underline{\mathrm{x}}, \frac{|\mathrm{Aut}_{\frac{1}{2}}\Gamma|}{2\varepsilon(\Gamma)} \underline{\mathrm{r}}(\Gamma)) = 0,$$

and vice via, if the rooted map sequences $\underline{\mathrm{r}}(\Gamma), \Gamma \in \mathcal{H}$ satisfies the equation (4.2), then

$$F_{\mathcal{H}}(\underline{\mathrm{x}}, \frac{2\varepsilon(\Gamma)}{|\mathrm{Aut}_{\frac{1}{2}}\Gamma|} \underline{\mathrm{g}}(\Gamma)) = 0.$$

Now assume that $F_{\mathcal{H}}(\underline{\mathrm{x}}, \underline{\mathrm{y}})$ is a y-linear function and has the following form

$$F_{\mathcal{H}}(\underline{\mathrm{x}}, \underline{\mathrm{y}}) = f(x_1, x_2, \cdots) \;+\; h(x_1, x_2, \cdots) \sum_{i \in I} y_i \;+\; l(x_1, x_2, \cdots) \sum_{\Lambda \in \mathcal{O}} \Lambda(\underline{\mathrm{y}}),$$

where $\mathcal{O}$ is a set of linear operators. If $F_{\mathcal{H}}(\underline{\mathrm{x}}, \underline{\mathrm{g}}(\Gamma)) = 0$, that is

$$f(x_1, x_2, \cdots) \;+\; h(x_1, x_2, \cdots) \sum_{i \in I, \Gamma \in \mathcal{H}} g_i(\Gamma) \;+\; l(x_1, x_2, \cdots) \sum_{\Lambda \in \mathcal{O}, \Gamma \in \mathcal{H}} \Lambda(\underline{\mathrm{g}}(\Gamma)) = 0,$$

we get that

$$\begin{aligned} f(x_1, x_2, \cdots) \quad &+ \quad h(x_1, x_2, \cdots) \sum_{i \in I, \Gamma \in \mathcal{H}} \frac{|\mathrm{Aut}_{\frac{1}{2}}\Gamma|}{2\varepsilon(\Gamma)} r_i(\Gamma) \\ &+ \quad l(x_1, x_2, \cdots) \sum_{\Lambda \in \mathcal{O}, \Gamma \in \mathcal{H}} \Lambda(\frac{|\mathrm{Aut}_{\frac{1}{2}}\Gamma|}{2\varepsilon(\Gamma)} \underline{\mathrm{r}}(\Gamma)) = 0. \end{aligned}$$

Since $\Lambda \in \mathcal{O}$ is a linear operator and $\frac{2\varepsilon(\Gamma)}{|\mathrm{Aut}_{\frac{1}{2}}\Gamma|}, \Gamma \in \mathcal{H}$ is a constant, we also have

$$\begin{aligned} f(x_1, x_2, \cdots) \quad &+ \quad \frac{|\mathrm{Aut}_{\frac{1}{2}}\Gamma|}{2\varepsilon(\Gamma)} h(x_1, x_2, \cdots) \sum_{i \in I, \Gamma \in \mathcal{H}} r_i(\Gamma) \\ &+ \quad \frac{|\mathrm{Aut}_{\frac{1}{2}}\Gamma|}{2\varepsilon(\Gamma)} l(x_1, x_2, \cdots) \sum_{\Lambda \in \mathcal{O}, \Gamma \in \mathcal{H}} \Lambda(\underline{\mathrm{r}}(\Gamma)) = 0, \end{aligned}$$

that is,

$$\frac{2\varepsilon(\Gamma)}{|\mathrm{Aut}_{\frac{1}{2}}\Gamma|}f(x_1,x_2,\cdots)+h(x_1,x_2,\cdots)\sum_{i\in I,\Gamma\in\mathcal{H}}r_i(\Gamma)+l(x_1,x_2,\cdots)\sum_{\Lambda\in\mathcal{O},\Gamma\in\mathcal{H}}\Lambda(\underline{\mathrm{r}}(\Gamma))=0.$$

Therefore, we get that

$$F^{\diamond}_{\mathcal{H}}(\underline{\mathrm{x}},\underline{\mathrm{r}}(\Gamma))=0.$$

Similarly, if

$$F_{\mathcal{H}}(\underline{\mathrm{x}},\underline{\mathrm{r}}(\Gamma))=0,$$

then we can also get that

$$F^{\star}_{\mathcal{H}}(\underline{\mathrm{x}},\underline{\mathrm{g}}(\Gamma))=0.$$

This completes the proof. $\natural$

Corollary 1.4.2 *Let $\mathcal{G}$ be a graph family and $\mathcal{H}\subseteq\mathcal{G}$. If the embedding sequence $\underline{g}(\Gamma)$ of a graph $\Gamma\in\mathcal{G}$ satisfies a recursive relation*

$$\sum_{i\in J,\Gamma\in\mathcal{H}}a(i,\Gamma)g_i(\Gamma)=0,$$

where J is the set of index, then the rooted map sequence $\underline{r}(\Gamma)$ satisfies a recursive relation

$$\sum_{i\in J,\Gamma\in\mathcal{H}}\frac{a(i,\Gamma)|\mathrm{Aut}_{\frac{1}{2}}\Gamma|}{2\varepsilon(\Gamma)}r_i(\Gamma)=0,$$

and vice via.

A typical example of the Corollary 1.4.2 is the graph family bouquets $B_n, n\geq 1$. Notice that in [24], the following recursive relation for the number $g_m(n)$ of embeddings of a bouquet B_n on an orientable surface with genus m for $n\geq 2$ was found.

$$\begin{aligned}(n+1)g_m(n) &= 4(2n-1)(2n-3)(n-1)^2(n-2)g_{m-1}(n-2)\\ &+ 4(2n-1)(n-1)g_m(n-1).\end{aligned}$$

and with the boundary conditions

$g_m(n) = 0$ if $m \leq 0$ or $n \leq 0$;
$g_0(0) = g_0(1) = 1$ and $g_m(0) = g_m(1) = 0$ for $m \geq 0$;
$g_0(2) = 4, g_1(2) = 2, g_m(2) = 0$ for $m \geq 1$.

Since $|\mathrm{Aut}_{\frac{1}{2}} B_n| = 2^n n!$, we get the following recursive relation for the number $r_m(n)$ of rooted maps on an orientable surface of genus m underlying a graph B_n by the Corollary 1.4.2

$$\begin{aligned}(n^2-1)(n-2)r_m(n) &= (2n-1)(2n-3)(n-1)^2(n-2)r_{m-1}(n-2) \\ &+ 2(2n-1)(n-1)(n-2)r_m(n-1),\end{aligned}$$

and with the boundary conditions

$r_m(n) = 0$ if $m \leq 0$ or $n \leq 0$;
$r_0(0) = r_0(1) = 1$ and $r_m(0) = r_m(1) = 0$ for $m \geq 0$;
$r_0(2) = 2, r_1(2) = 1, g_m(2) = 0$ for $m \geq 1$.

Corollary 1.4.3 *Let $\mathcal{G}$ be a graph family and $\mathcal{H} \subseteq \mathcal{G}$. If the embedding sequences $\underline{g}(\Gamma), \Gamma \in \mathcal{G}$ satisfies an operator equation*

$$\sum_{\Lambda \in \mathcal{O}, \Gamma \in \mathcal{H}} \Lambda(\underline{g}(\Gamma)) = 0,$$

where $\mathcal{O}$ denotes a set of linear operators, then the rooted map sequences $\underline{r}(\Gamma), \Gamma \in \mathcal{H}$ satisfies an operator equation

$$\sum_{\Lambda \in \mathcal{O}, \Gamma \in \mathcal{H}} \Lambda(\frac{|\mathrm{Aut}_{\frac{1}{2}}\Gamma|}{2\varepsilon(\Gamma)} \underline{r}(\Gamma)) = 0,$$

and vice via.

Let $\theta = (\theta_1, \theta_2, \cdots, \theta_k) \vdash 2n$, i.e., $\sum\limits_{j=1}^{k} \theta_j = 2n$ with positive integers θ_j. Kwak and Shim introduced three linear operators Γ, Θ and Δ to find the total genus polynomial of the bouquets $B_n, n \geq 1$ in [31], which are defined as follows.

Denotes by z_θ and $z_\theta^{-1} = 1/z_\theta$ the multivariate monomials $\prod\limits_{i=1}^{k} z_{\theta_i}$ and $1/\prod\limits_{i=1}^{k} z_{\theta_i}$, where $\theta = (\theta_1, \theta_2, \cdots, \theta_k) \vdash 2n$. Then the linear operators Γ, Θ and Δ are defined by

$$\Gamma(z_\theta^{\pm 1}) = \sum_{j=1}^{k}\sum_{l=0}^{\theta_j}\theta_j\{(\frac{z_{1+l}z_{\theta_{j+1-l}}}{z_{\theta_j}})z_\theta\}^{\pm 1}$$

$$\Theta(z_\theta^{\pm 1}) = \sum_{j=1}^{k}(\theta_j^2+\theta_j)(\frac{z_{\theta_j+2}z_\theta}{z_{\theta_j}})^{-1}$$

and

$$\Delta(z_\theta^{\pm 1}) = \sum_{1\le i<j\le k} 2\theta_i\theta_j[\{(\frac{z_{\theta_j+\theta_i+2}}{z_{\theta_j}z_{\theta_i}})z_\theta\}^{\pm 1} + \{(\frac{z_{\theta_j+\theta_i+2}}{z_{\theta_j}z_{\theta_i}})z_\theta\}^{-1}]$$

Denotes by $\hat{i}[B_n](z_j)$ the sum of all monomial z_θ or $1/z_\theta$ taken over all embeddings of B_n into an orientable or non-orientable surface, that is

$$\hat{i}[B_n](z_j) = \sum_{\theta\vdash 2n} i_\theta(B_n)z_\theta + \sum_{\theta\vdash 2n}\tilde{i}_\theta(B_n)z_\theta^{-1},$$

where, $i_\theta(B_n)$ and $\tilde{i}_\theta(B_n)$ denote the number of embeddings of B_n into orientable and non-orientable surface of region type θ. They proved in [31] that

$$\hat{i}[B_{n+1}](z_j) = (\Gamma+\Theta+\Delta)\hat{i}[B_n](z_j) = (\Gamma+\Theta+\Delta)^n(\frac{1}{z_2}+z_1^2).$$

and

$$G[B_{n+1}](x) = (\Gamma+\Theta+\Delta)^n(\frac{1}{z_2}+z_1^2)|_{z_j=x \text{ for } j\ge 1 \text{ and } (C*)}.$$

Where, $(C*)$ denotes the condition

$(C*)$: *replacing the power* $1+n-2i$ *of* x *by* i *if* $i\ge 0$ *and* $-(1+n+i)$ *by* $-i$ *if* $i\le 0$.

Since

$$\frac{|\mathrm{Aut}_{\frac{1}{2}}B_n|}{2\varepsilon(B_n)} = \frac{2^n n!}{2n} = 2^{n-1}(n-1)!$$

and Γ,Θ,Δ are linear, by the Corollary 1.4.3 we know that

$$\begin{aligned} R[B_{n+1}](x) &= \frac{(\Gamma+\Theta+\Delta)\hat{i}[B_n](z_j)}{2^n n!}|_{z_j=x \text{ for } j\ge 1 \text{ and } (C*)} \\ &= \frac{(\Gamma+\Theta+\Delta)^n(\frac{1}{z_2}+z_1^2)}{\prod_{k=1}^{n}2^k k!}|_{z_j=x \text{ for } j\ge 1 \text{ and } (C*)}. \end{aligned}$$

For example, calculation shows that

$$R[B_1](x) = x + \frac{1}{x};$$

$$R[B_2](x) = 2 + x + \frac{5}{x} + \frac{4}{x^2};$$

$$R[B_3](x) = \frac{41}{x^3} + \frac{42}{x^2} + \frac{22}{x} + 5 + 10x;$$

and

$$R[B_4](x) = \frac{488}{x^4} + \frac{690}{x^3} + \frac{304}{x^2} + \frac{93}{x} + 14 + 70x + 21x^2.$$

Chapter 2 On the Automorphisms of a Klein Surface and a s-Manifold

Many papers concerned the automorphisms of a Klein surface, such as,[1], [15], [26], [38] for a Riemann surface by using Fuchsian group and [9] − [10], [21] for a Klein surface without boundary by using NEC groups. Since maps is a natural model for the Klein surfaces, an even more efficient approach is, perhaps, by using the combinatorial map theory. Establishing some classical results again and finding their combinatorial refinement are the central topics in this chapter.

§1. An algebraic definition of a voltage map

1.1 Coverings of a map

For two maps $\widetilde{M} = (\widetilde{\mathcal{X}}_{\alpha,\beta}, \widetilde{\mathcal{P}})$ and $M = (\mathcal{X}_{\alpha,\beta}, \mathcal{P})$, call the map $\widetilde{M}$ covering the map M if there is a mapping $\pi : \widetilde{\mathcal{X}}_{\alpha,\beta} \to \mathcal{X}_{\alpha,\beta}$ such that $\forall x \in \widetilde{\mathcal{X}_{\alpha,\beta}}$,

$$\alpha\pi(x) = \pi\alpha(x),\ \beta\pi(x) = \pi\beta(x) \textit{ and } \pi\widetilde{\mathcal{P}}(x) = \mathcal{P}\pi(x).$$

The mapping π is called a *covering mapping*. For $\forall x \in \mathcal{X}_{\alpha,\beta}$, define the *quadricell set* $\pi^{-1}(x)$ by

$$\pi^{-1}(x) = \{\widetilde{x} | \widetilde{x} \in (\widetilde{\mathcal{X}}_{\alpha,\beta} \text{ and } \pi(\widetilde{x}) = x\}.$$

We have the following result.

Lemma 2.1.1 *Let $\pi : \widetilde{\mathcal{X}}_{\alpha,\beta} \to \mathcal{X}_{\alpha,\beta}$ be a covering mapping. Then for any two quadricells $x_1, x_2 \in \mathcal{X}_{\alpha,\beta}$,*

(i) $|\pi^{-1}(x_1)| = |\pi^{-1}(x_2)|$.

(ii) If $x_1 \neq x_2$, then $\pi^{-1}(x_1) \bigcap \pi^{-1}(x_2) = \emptyset$.

Proof (i) By the definition of a map, for $x_1, x_2 \in \mathcal{X}_{\alpha,\beta}$, there exists an element $\sigma \in \Psi_J =< \alpha, \beta, \mathcal{P} >$ such that $x_2 = \sigma(x_1)$.

Since π is an covering mapping from $\widetilde{M}$ to M, it is commutative with α, β and $\mathcal{P}$. Whence, π is also commutative with σ. Therefore,

$$\pi^{-1}(x_2) = \pi^{-1}(\sigma(x_1)) = \sigma(\pi^{-1}(x_1)).$$

Notice that $\sigma \in \Psi_J$ is an $1-1$ mapping on $\mathcal{X}_{\alpha,\beta}$. Hence, $|\pi^{-1}(x_1)| = |\pi^{-1}(x_2)|$.

(ii) If $x_1 \neq x_2$ and there exists an element $y \in \pi^{-1}(x_1) \bigcap \pi^{-1}(x_2)$, then there must be $x_1 = \pi(y) = x_2$. Contradicts the assumption. $\natural$

The relation of a covering mapping with an isomorphism is in the following theorem.

Theorem 2.1.1 *Let $\pi : \widetilde{\mathcal{X}}_{\alpha,\beta} \to \mathcal{X}_{\alpha,\beta}$ be a covering mapping. Then π is an isomorphism iff π is an $1-1$ mapping.*

Proof If π is an isomorphism between the maps $\widetilde{M} = (\widetilde{\mathcal{X}}_{\alpha,\beta}, \widetilde{\mathcal{P}})$ and $M = (\mathcal{X}_{\alpha,\beta}, \mathcal{P})$, then it must be an $1-1$ mapping by the definition, and vice via. $\natural$

A covering mapping π from $\widetilde{M}$ to M naturally induces a mapping π^* by the following condition:

$$\forall x \in \mathcal{X}_{\alpha,\beta}, g \in \mathrm{Aut}\widetilde{M}, \pi^* : g \to \pi g \pi^{-1}(x).$$

We have the following result.

Theorem 2.1.2 *If $\pi : \widetilde{\mathcal{X}}_{\alpha,\beta} \to \mathcal{X}_{\alpha,\beta}$ is a covering mapping, then the induced mapping π^* is a homomorphism from* $\mathrm{Aut}\widetilde{M}$ *to* $\mathrm{Aut}M$.

Proof First, we prove that for $\forall g \in \mathrm{Aut}\widetilde{M}$ and $x \in \mathcal{X}_{\alpha,\beta}$, $\pi^*(g) \in \mathrm{AutM}$.

Notice that for $\forall g \in \mathrm{Aut}\widetilde{M}$ and $x \in \mathcal{X}_{\alpha,\beta}$,

$$\pi g \pi^{-1}(x) = \pi(g\pi^{-1}(x)) \in \mathcal{X}_{\alpha,\beta}$$

and $\forall x_1, x_2 \in \mathcal{X}_{\alpha,\beta}$, if $x_1 \neq x_2$, then $\pi g \pi^{-1}(x_1) \neq \pi g \pi^{-1}(x_2)$. Otherwise, assume that

$$\pi g \pi^{-1}(x_1) = \pi g \pi^{-1}(x_2) = x_0 \in \mathcal{X}_{\alpha,\beta},$$

then we have that $x_1 = \pi g^{-1} \pi^{-1}(x_0) = x_2$. Contradicts to the assumption.

By the definition, for $x \in \mathcal{X}_{\alpha,\beta}$ we get that

$$\pi^*\alpha(x) = \pi g\pi^{-1}\alpha(x) = \pi g\alpha\pi^{-1}(x) = \pi\alpha g\pi^{-1}(x) = \alpha\pi g\pi^{-1}(x) = \alpha\pi^*(x),$$

$$\pi^*\beta(x) = \pi g\pi^{-1}\beta(x) = \pi g\beta\pi^{-1}(x) = \pi\beta g\pi^{-1}(x) = \beta\pi g\pi^{-1}(x) = \beta\pi^*(x).$$

Notice that $\pi(\widetilde{\mathcal{P}}) = \mathcal{P}$. We get that

$$\pi^*\mathcal{P}(x) = \pi g\pi^{-1}\mathcal{P}(x) = \pi g\widetilde{\mathcal{P}}\pi^{-1}(x) = \pi\widetilde{\mathcal{P}}g\pi^{-1}(x) = \mathcal{P}\pi g\pi^{-1}(x) = \mathcal{P}\pi^*(x).$$

Therefore, we get that $\pi g\pi^{-1} \in \mathrm{Aut}M$, i.e., $\pi^* : \mathrm{Aut}\widetilde{M} \to \mathrm{Aut}M$.

Now we prove that π^* is a homomorphism from $\mathrm{Aut}\widetilde{M}$ to $\mathrm{Aut}M$. In fact, for $\forall g_1, g_2 \in \mathrm{Aut}\widetilde{M}$, we have that

$$\pi^*(g_1g_2) = \pi(g_1g_2)\pi^{-1} = (\pi g_1\pi^{-1})(\pi g_2\pi^{-1}) = \pi^*(g_1)\pi^*(g_2).$$

Whence, $\pi^* : \mathrm{Aut}\widetilde{M} \to \mathrm{Aut}M$ is a homomorphism. $\natural$

1.2 **Voltage maps**

For creating a homomorphism between Klein surfaces, voltage maps are extensively used, which is introduced by Gustin in 1963 and extensively used by Youngs in 1960s for proving the Heawood map coloring theorem and generalized by Gross in 1974 ([22]). Now it already become a powerful approach for getting regular maps on a surface, see [5], [7], [56] – [57], [65]], especially, [56] – [57]. It often appears as an embedded voltage graph in references. Notice that by using the voltage graph theory, the 2-factorable graphs are enumerated in [51]. Now we give a purely algebraic definition for voltage maps, not using geometrical intuition and establish its theory in this section and the next section again.

Definition 2.1.1 *Let $M = (\mathcal{X}_{\alpha,\beta}, \mathcal{P})$ be a map and G a finite group. Call a pair (M, ϑ) a voltage map with group G if $\vartheta : \mathcal{X}_{\alpha,\beta} \to G$, satisfying the following condition:*

(*i*) $\forall x \in \mathcal{X}_{\alpha,\beta}, \vartheta(\alpha x) = \vartheta(x), \vartheta(\alpha\beta x) = \vartheta(\beta x) = \vartheta^{-1}(x)$;

(ii) $\forall F = (x, y, \cdots, z)(\beta z, \cdots, \beta y, \beta x) \in F(M)$, *the face set of* M, $\vartheta(F) = \vartheta(x)\vartheta(y)\cdots\vartheta(z)$ *and* $< \vartheta(F)|F \in F(u), u \in V(M) >= G$, *where,* $F(u)$ *denotes all the faces incident with the vertex* u.

For a given voltage graph (M, ϑ), define

$$\mathcal{X}_{\alpha^\vartheta,\beta^\vartheta} = \mathcal{X}_{\alpha,\beta} \times G$$

$$\mathcal{P}^\vartheta = \prod_{(x,y,\cdots,z)(\alpha z,\cdots,\alpha y,\alpha x)\in V(M)} \prod_{g\in G} (x_g, y_g, \cdots, z_g)(\alpha z_g, \cdots, \alpha y_g, \alpha x_g),$$

and

$$\alpha^\vartheta = \alpha$$

$$\beta^\vartheta = \prod_{x\in\mathcal{X}_{\alpha,\beta}, g\in G} (x_g, (\beta x)_{g\vartheta(x)}).$$

where, we use u_g denoting an element $(u, g) \in \mathcal{X}_{\alpha,\beta} \times G$.

It can be shown that $M^\vartheta = (\mathcal{X}_{\alpha^\vartheta,\beta^\vartheta}, \mathcal{P}^\vartheta)$ also satisfying the conditions of a map with the same orientation as the map M. Hence, we can define the lifting map of a voltage map as follows.

Definition 2.1.2 *For a voltage map* (M, ϑ) *with group* G, *the map* $M^\vartheta = (\mathcal{X}^\vartheta_{\alpha,\beta}, \mathcal{P}^\vartheta)$ *is called its lifting map.*

For a vertex $v = (C)(\alpha C\alpha^{-1}) \in V(M)$, denote by $\{C\}$ the quadricells in the cycle C. The following numerical result is obvious by the definition of a lifting map.

Lemma 2.1.2 *The numbers of vertices and edges in the lifting map* M^ϑ *are respective*

$$\nu(M^\vartheta) = \nu(M)|G| \ \ and \ \ \varepsilon(M^\vartheta) = \varepsilon(M)|G|$$

Lemma 2.1.3 *Let* $F = (C^*)(\alpha C^*\alpha^{-1})$ *be a face in the map* M. *Then there are* $|G|/o(F)$ *faces in the lifting map* M^ϑ *with length* $|F|o(F)$ *lifted from the face* F, *where* $o(F)$ *denotes the order of* $\prod_{x\in\{C\}} \vartheta(x)$ *in the group* G.

Proof Let $F = (u, v \cdots, w)(\beta w, \cdots, \beta v, \beta u)$ be a face in the map M and k is the length of F. Then, by the definition, for $\forall g \in G$, the conjugate cycles

$$\begin{aligned}(C^*)^\vartheta &= (u_g, v_{g\vartheta(u)}, \cdots, u_{g\vartheta(F)}, v_{g\vartheta(F)\vartheta(u)}, \cdots, w_{g\vartheta(F)^2}, \cdots, w_{g\vartheta^{o(F)-1}(F)}) \\ &\quad \beta(u_g, v_{g\vartheta(u)}, \cdots, u_{g\vartheta(F)}, v_{g\vartheta(F)\vartheta(u)}, \cdots, w_{g\vartheta(F)^2}, \cdots, w_{g\vartheta^{o(F)-1}(F)})^{-1}\beta^{-1}.\end{aligned}$$

is a face in M^ϑ with length $ko(F)$. Therefore, there are $|G|/o(F)$ faces in the lifting map M^ϑ. altogether. $\natural$.

Therefore,we get that

Theorem 2.1.3 *The Euler characteristic $\chi(M^\vartheta)$ of the lifting map M^ϑ of the voltage map (M, G) is*

$$\chi(M^\vartheta) = |G|(\chi(M) + \sum_{m \in \mathcal{O}(F(M))} (-1 + \frac{1}{m})),$$

where $\mathcal{O}(F(M))$ denotes the order $o(F)$ set of the faces in M.

Proof According to the Lemma 2.1.2 and 2.1.3, the lifting map M^ϑ has $|G|\nu(M)$ vertices, $|G|\varepsilon(M)$ edges and $|G| \sum_{m \in \mathcal{O}(F(M))} \frac{1}{m}$ faces. Therefore, we get that

$$\begin{aligned}\chi(M^\vartheta) &= \nu(M^\vartheta) - \varepsilon(M^\vartheta) + \phi(M^\vartheta) \\ &= |G|\nu(M) - |G|\varepsilon(M) + |G| \sum_{m \in \mathcal{O}(F(M))} \frac{1}{m} \\ &= |G|(\chi(M) - \phi(M) + \sum_{m \in \mathcal{O}(F(M))} \frac{1}{m}) \\ &= |G|(\chi(M) + \sum_{m \in \mathcal{O}(F(M))} (-1 + \frac{1}{m})). \qquad \natural\end{aligned}$$

§2. Combinatorial conditions for a group being that of a map

Locally characterizing that an automorphism of a voltage map is that of its lifting is well-done in the references [40] – [41]. Among them, a typical result is the following:

An automorphism ζ of a map M with voltage assignment $\vartheta \to G$ is an automorphism of its lifting map M^{ϑ} if for each face F with $\vartheta(F) = \mathbf{1_G}$, $\vartheta(\zeta(F)) = \mathbf{1_G}$.

Since the central topic in this chapter is found what a finite group is an automorphism group of a map, i.e., a global question, the idea used in the references [40]−[41] are not applicable. New approach should be used.

2.1 Combinatorial conditions for an automorphism group of a map

First, we characterize an automorphism group of a map.

A permutation group G action on Ω is called *fixed-free* if $G_x = \mathbf{1}_G$ for $\forall x \in \Omega$. We have the following.

Lemma 2.2.1 *Any automorphism group G of a map $M = (\mathcal{X}_{\alpha,\beta}, \mathcal{P})$ is fixed-free on $\mathcal{X}_{\alpha,\beta}$.*

Proof For $\forall x \in \mathcal{X}_{\alpha,\beta}$,since $G \preceq \mathrm{Aut}M$, we get that $G_x \preceq (\mathrm{Aut}M)_x$. Notice that $(\mathrm{Aut}M)_x = \mathbf{1}_G$. Whence, we know that $G_x = \mathbf{1}_G$, i.e., G is fixed-free. $\natural$

Notice that the automorphism group of a lifting map has a obvious subgroup, determined by the following lemma.

Lemma 2.2.2 *Let M^{ϑ} be a lifting map by the voltage assignment $\vartheta : \mathcal{X}_{\alpha,\beta} \to G$. Then G is isomorphic to a fixed-free subgroup of $\mathrm{Aut}M^{\vartheta}$ on $V(M^{\vartheta})$.*

Proof For $\forall g \in G$, we prove that the induced action $g^* : \mathcal{X}_{\alpha^{\vartheta},\beta^{\vartheta}} \to \mathcal{X}_{\alpha^{\vartheta},\beta^{\vartheta}}$ by $g^* : x_h \to x_{gh}$ is an automorphism of the map M^{ϑ}.

In fact, g^* is a mapping on $\mathcal{X}_{\alpha^{\vartheta},\beta^{\vartheta}}$ and for $\forall x_u \in \mathcal{X}_{\alpha^{\vartheta},\beta^{\vartheta}}$, we get $g^* : x_{g^{-1}u} \to x_u$.

Now if for $x_h, y_f \in \mathcal{X}_{\alpha^{\vartheta},\beta^{\vartheta}}, x_h \neq y_f$, we have that $g^*(x_h) = g^*(y_f)$, that is, $x_{gh} = y_{gf}$, by the definition, we must have that $x = y$ and $gh = gf$, i.e., $h = f$. Whence, $x_h = y_f$, contradicts to the assumption. Therefore, g^* is $1-1$ on $\mathcal{X}_{\alpha^{\vartheta},\beta^{\vartheta}}$.

We prove that for $x_u \in \mathcal{X}_{\alpha^{\vartheta},\beta^{\vartheta}}$, g^* ia commutative with $\alpha^{\vartheta}, \beta^{\vartheta}$ and $\mathcal{P}^{\vartheta}$. Notice that

$$g^*\alpha^{\vartheta}x_u = g^*(\alpha x)_u = (\alpha x)_{gu} = \alpha x_{gu} = \alpha g^*(x_u);$$

$$g^*\beta^{\vartheta}(x_u) = g^*(\beta x)_{u\vartheta(x)} = (\beta x)_{gu\vartheta(x)} = \beta x_{gu\vartheta(x)} = \beta^{\vartheta}(x_{gu}) = \beta^{\vartheta}g^*(x_u)$$

and

$$\begin{aligned}
&g^*\mathcal{P}^\vartheta(x_u)\\
&\quad= \quad g^* \prod_{(x,y,\cdots,z)(\alpha z,\cdots,\alpha y,\alpha x)\in V(M)} \prod_{u\in G}(x_u,y_u,\cdots,z_u)(\alpha z_u,\cdots,\alpha y_u,\alpha x_u)(x_u)\\
&\quad= \quad g^* y_u = y_{gu}\\
&\quad= \quad \prod_{(x,y,\cdots,z)(\alpha z,\cdots,\alpha y,\alpha x)\in V(M)} \prod_{gu\in G}(x_{gu},y_{gu},\cdots,z_{gu})(\alpha z_{gu},\cdots,\alpha y_{gu},\alpha x_{gu})(x_{gu})\\
&\quad= \quad \mathcal{P}^\vartheta(x_{gu}) = \mathcal{P}^\vartheta g^*(x_u).
\end{aligned}$$

Therefore, g^* is an automorphism of the lifting map M^ϑ.

To see g^* is fixed-free on $V(M)$, choose $\forall u = (x_h, y_h, \cdots, z_h)(\alpha z_h, \cdots, \alpha y_h, \alpha x_h) \in V(M), h \in G$. If $g^*(u) = u$, i.e.,

$$(x_{gh}, y_{gh}, \cdots, z_{gh})(\alpha z_{gh}, \cdots, \alpha y_{gh}, \alpha x_{gh}) = (x_h, y_h, \cdots, z_h)(\alpha z_h, \cdots, \alpha y_h, \alpha x_h).$$

Assume that $x_{gh} = w_h$, where $w_h \in \{x_h, y_h, \cdots, z_h, \alpha x_h, \alpha y_h, \cdots, \alpha z_h\}$. By the definition, there must be that $x = w$ and $gh = h$. Therefore, $g = \mathbf{1}_G$, i.e., $\forall g \in G$, g^* is fixed-free on $V(M)$.

Now define $\tau : g^* \to g$. Then τ is an isomorphism between the action of elements in G on $\mathcal{X}_{\alpha^\vartheta,\beta^\vartheta}$ and the group G itself. $\natural$

According to the Lemma 2.2.1, given a map M and a group $G \preceq \mathrm{Aut}M$, we can define a *quotient map* $M/G = (\mathcal{X}_{\alpha,\beta}/G, \mathcal{P}/G)$ as follows.

$$\mathcal{X}_{\alpha,\beta}/G = \{x^G | x \in \mathcal{X}_{\alpha,\beta}\},$$

where x^G denotes an orbit of G action on $\mathcal{X}_{\alpha,\beta}$ containing x and

$$\mathcal{P}/G = \prod_{(x,y,\cdots,z)(\alpha z,\cdots,\alpha y,\alpha x)\in V(M)} (x^G, y^G, \cdots)(\cdots, \alpha y^G, \alpha x^G),$$

since G action on $\mathcal{X}_{\alpha,\beta}$ is fixed-free.

Notice that the map M may be not a regular covering of its quotient map M/G. We have the following theorem characterizing a fixed-free automorphism group of a map on $V(M)$.

Theorem 2.2.1 *An finite group G is a fixed-free automorphism group of a map $M = (\mathcal{X}_{\alpha,\beta}, \mathcal{P})$ on $V(M)$ iff there is a voltage map $(M/G, G)$ with an assignment $\vartheta : \mathcal{X}_{\alpha,\beta}/G \to G$ such that $M \cong (M/G)^{\vartheta}$.*

Proof The necessity of the condition is already proved in the Lemma 2.2.2. We only need to prove its sufficiency.

Denote by $\pi : M \to M/G$ the quotient map from M to M/G. For each element of $\pi^{-1}(x^G)$, we give it a label. Choose $x \in \pi^{-1}(x^G)$. Assign its label $l : x \to x_{\mathbf{1}_G}$, i.e., $l(x) = x_{\mathbf{1}_G}$. Since the group G acting on $\mathcal{X}_{\alpha,\beta}$ is fixed-free, if $u \in \pi^{-1}(x^G)$ and $u = g(x), g \in G$, we label u with $l(u) = x_g$. Whence, each element in $\pi^{-1}(x^G)$ is labelled by a unique element in G.

Now we assign voltages on the quotient map $M/G = (\mathcal{X}_{\alpha,\beta}/G, \mathcal{P}/G)$. If $\beta x = y, y \in \pi^{-1}(y^G)$ and the label of y is $l(y) = y^*_h, h \in G$, where, $l(y^*) = \mathbf{1}_G$, then we assign a voltage h on x^G,i.e., $\vartheta(x^G) = h$. We should prove this kind of voltage assignment is well-done, which means that we must prove that for $\forall v \in \pi^{-1}(x^G)$ with $l(v) = j, j \in G$, the label of βv is $l(\beta v) = jh$. In fact, by the previous labelling approach, we know that the label of βv is

$$\begin{aligned} l(\beta v) &= l(\beta g x) = l(g\beta x) \\ &= l(gy) = l(ghy^*) = gh. \end{aligned}$$

Denote by M^l the labelled map M on each element in $\mathcal{X}_{\alpha,\beta}$. Whence, $M^l \cong M$. By the previous voltage assignment, we also know that M^l is a lifting of the quotient map M/G with the voltage assignment $\vartheta : \mathcal{X}_{\alpha,\beta}/G \to G$. Therefore,

$$M \cong (M/G)^{\vartheta}.$$

This completes the proof. $\natural$

According to the Theorem 2.2.1, we get the following result for a group to be an automorphism group of a map.

Theorem 2.2.2 *If a group $G, G \preceq \mathrm{Aut}M$, is fixed-free on $V(M)$, then*

$$|G|(\chi(M/G) + \sum_{m \in \mathcal{O}(F(M/G))} (-1 + \frac{1}{m})) = \chi(M).$$

Proof By the Theorem 2.2.1, we know that there is a voltage assignment ϑ on the quotient map M/G such that

$$M \cong (M/G)^{\vartheta}.$$

Applying the Theorem 2.1.3, we know the Euler characteristic of the map M is

$$\chi(M) = |G|(\chi(M/G) + \sum_{m\in\mathcal{O}(F(M/G))}(-1+\frac{1}{m})). \qquad \natural$$

Theorem 2.2.2 has some useful corollaries for determining the automorphism group of a map.

Corollary 2.2.1 *If M is an orientable map of genus p, $G \preceq \mathrm{Aut}M$ is fixed-free on $V(M)$ and the quotient map M/G with genus γ, then*

$$|G| = \frac{2p-2}{2\gamma - 2 + \sum\limits_{m\in\mathcal{O}(F(M/G))}(1-\frac{1}{m}))}.$$

Particularly, if M/G is planar, then

$$|G| = \frac{2p-2}{-2 + \sum\limits_{m\in\mathcal{O}(F(M/G))}(1-\frac{1}{m}))}.$$

Corollary 2.2.2 *If M is a non-orientable map of genus q, $G \preceq \mathrm{Aut}M$ is fixed-free on $V(M)$ and the quotient map M/G with genus δ, then*

$$|G| = \frac{q-2}{\delta - 2 + \sum\limits_{m\in\mathcal{O}(F(M/G))}(1-\frac{1}{m}))}.$$

Particularly, if M/G is projective planar, then

$$|G| = \frac{q-2}{-1 + \sum\limits_{m\in\mathcal{O}(F(M/G))}(1-\frac{1}{m}))}.$$

By applying the Theorem 2.2.1, we can also calculate the Euler characteristic of the quotient map, which enables us to get the following result for a group being that of a map.

Theorem 2.2.3 *If a group $G, G \preceq \mathrm{Aut}M$, then*

$$\chi(M) + \sum_{g\in G, g\neq \mathbf{1}_G} (|\Phi_v(g)| + |\Phi_f(g)|) = |G|\chi(M/G),$$

where, $\Phi_v(g) = \{v|v \in V(M), v^g = v\}$ and $\Phi_f(g) = \{f|f \in F(M), f^g = f\}$, and if G is fixed-free on $V(M)$, then

$$\chi(M) + \sum_{g\in G, g\neq \mathbf{1}_G} |\Phi_f(g)| = |G|\chi(M/G).$$

Proof By the definition of a quotient map, we know that

$$\phi_v(M/G) = orb_v(G) = \frac{1}{|G|}\sum_{g\in G} |\Phi_v(g)|$$

and

$$\phi_f(M/G) = orb_f(G) = \frac{1}{|G|}\sum_{g\in G} |\Phi_f(g)|,$$

by applying the Burnside Lemma. Since G is fixed-free on $\mathcal{X}_{\alpha,\beta}$ by the Lemma 2.1, we also know that

$$\varepsilon(M/G) = \frac{\varepsilon(M)}{|G|}.$$

Applying the Euler-Poincaré formula for the quotient map M/G, we get that

$$\frac{\sum_{g\in G} |\Phi_v(g)|}{|G|} - \frac{\varepsilon(M)}{|G|} + \frac{\sum_{g\in G} |\Phi_f(g)|}{|G|} = \chi(M/G).$$

Whence, we have

$$\sum_{g\in G} |\Phi_v(g)| - \varepsilon(M) + \sum_{g\in G} |\Phi_f(g)| = |G|\chi(M/G).$$

Notice that $\nu(M) = |\Phi_v(\mathbf{1}_G)|$, $\phi(M) = |\Phi_f(\mathbf{1}_G)|$ and $\nu(M) - \varepsilon(M) + \phi(M) = \chi(M)$. We know that

$$\chi(M) + \sum_{g\in G, g\neq \mathbf{1}_G} (|\Phi_v(g)| + |\Phi_f(g)|) = |G|\chi(M/G).$$

Now if G is fixed-free on $V(M)$, by the Theorem 2.1, there is a voltage assignment ϑ on the quotient map M/G such that $M \cong (M/G)^{\vartheta}$. According to the Lemma 2.1.2, we know that

$$\nu(M/G) = \frac{\nu(M)}{|G|}.$$

Whence, $\sum\limits_{g\in G} |\Phi_v(g)| = \nu(M)$ and $\sum\limits_{g\in G, g\neq \mathbf{1}_G} (|\Phi_v(g)| = 0$. Therefore, we get that

$$\chi(M) + \sum_{g\in G, g\neq \mathbf{1}_G} |\Phi_f(g)| = |G|\chi(M/G). \qquad \natural$$

Consider the properties of the group G on $F(M)$, we get the following interesting results.

Corollary 2.2.3 *If a finite group $G, G \preceq \mathrm{Aut}M$ is fixed-free on $V(M)$ and transitive on $F(M)$, for example, M is regular and $G = \mathrm{Aut}M$, then M/G is an one face map and*

$$\chi(M) = |G|(\chi(M/G) - 1) + \phi(M)$$

Particularly, for an one face map, we know that

Corollary 2.2.4 *For an one face map M, if G, $G \preceq \mathrm{Aut}M$ is fixed-free on $V(M)$, then*

$$\chi(M) - 1 = |G|(\chi(M/G) - 1),$$

and $|G|$, especially, $|\mathrm{Aut}M|$ is an integer factor of $\chi(M) - 1$.

Remark 2.2.1 For an one face planar map, i.e., the plane tree, the only fixed-free automorphism group on its vertices is the trivial group by the Corollary 2.4.

2.2 **The measures on a map**

On the classical geometry, its central question is to determine the measures on the objects, such as the distance, angle, area, volume, curvature, ... For maps being a combinatorial model of Klein surfaces, we also wish to introduce various measures on a map and enlarge its application filed to other branch of mathematics..

2.2.1 The angle on a map

For a map $M = (\mathcal{X}_{\alpha,\beta}, \mathcal{P})$, $x \in \mathcal{X}_{\alpha,\beta}$, the permutation pair $\{(x, \mathcal{P}x), (\alpha x, \mathcal{P}^{-1}\alpha x)\}$ is called an *angle* incident with x, which is introduced by Tutte in [66]. We prove in this section that any automorphism of a map is a conformal mapping and affirm the Theorem 1.2.7 in Chapter 1 again.

Define an *angle transformation* Θ of angles of a map $M = (\mathcal{X}_{\alpha,\beta}, \mathcal{P})$ as follows.

$$\Theta = \prod_{x \in \mathcal{X}_{\alpha,\beta}} (x, \mathcal{P}x).$$

Then we have

Theorem 2.2.4 *Any automorphism of a map $M = (\mathcal{X}_{\alpha,\beta}, \mathcal{P})$ is conformal.*

Proof By the definition, for $\forall g \in \mathrm{Aut}M$, we know that

$$\alpha g = g\alpha,\ \beta g = g\beta \text{ and } \mathcal{P}g = g\mathcal{P}.$$

Therefore, for $\forall x \in \mathcal{X}_{\alpha,\beta}$, we have

$$\Theta g(x) = (g(x), \mathcal{P}g(x))$$

and

$$g\Theta(x) = g(x, \mathcal{P}x) = (g(x), \mathcal{P}g(x)).$$

Whence, we get that for $\forall x \in \mathcal{X}_{\alpha,\beta}$, $\Theta g(x) = g\Theta(x)$. Therefore, we get that $\Theta g = g\Theta$,i.e., $g\Theta g^{-1} = \Theta$.

Since for $\forall x \in \mathcal{X}_{\alpha,\beta}$, $g\Theta g^{-1}(x) = (g(x), \mathcal{P}g(x))$ and $\Theta(x) = (x, \mathcal{P}(x))$, we have that

$$(g(x), \mathcal{P}g(x)) = (x, \mathcal{P}(x)).$$

That is, g is a conformal mapping. $\natural$

2.2.2 The non-Euclid area on a map

For a given voltage map (M, G), its *non-Euclid area* $\mu(M, G)$ is defined by

$$\mu(M,G) = 2\pi(-\chi(M) + \sum_{m\in\mathcal{O}(F(M))}(-1+\frac{1}{m})).$$

Particularly, since any map M can be viewed as a voltage map $(M, \mathbf{1}_G)$, we get the non-Euclid area of a map M

$$\mu(M) = \mu(M, \mathbf{1}_G) = -2\pi\chi(M).$$

Notice that the area of a map is only dependent on the genus of the surface. We know the following result.

Theorem 2.2.5 *Two maps on one surface have the same non-Euclid area.*

By the non-Euclid area, we get the *Riemann-Hurwitz formula* in Klein surface theory for a map in the following result.

Theorem 2.2.6 *If $G \preceq \mathrm{Aut}M$ is fixed-free on $V(M)$, then*

$$|G| = \frac{\mu(M)}{\mu(M/G, \vartheta)},$$

where ϑ is constructed in the proof of the Theorem 2.2.1.

Proof According to the Theorem 2.2.2, we know that

$$\begin{aligned} |G| &= \frac{-\chi(M)}{-\chi(M) + \sum\limits_{m\in\mathcal{O}(F(M))}(-1+\frac{1}{m})} \\ &= \frac{-2\pi\chi(M)}{2\pi(-\chi(M) + \sum\limits_{m\in\mathcal{O}(F(M))}(-1+\frac{1}{m}))} = \frac{\mu(M)}{\mu(M/G,\vartheta)}. \qquad \natural \end{aligned}$$

As an interesting result, we can obtain the same result for the non-Euclid area of a triangle as the classical differential geometry.

Theorem 2.2.7([42]) *The non-Euclid area $\mu(\Delta)$ of a triangle Δ on a surface $\mathcal{S}$ with internal angles η, θ, σ is*

$$\mu(\Delta) = \eta + \theta + \sigma - \pi.$$

Proof According to the Theorem 1.2.1 and 2.2.5, we can assume there is a triangulation M with internal angles η, θ, σ on $\mathcal{S}$ and with an equal non-Euclid area on each triangular disk. Then

$$\begin{aligned}\phi(M)\mu(\Delta) &= \mu(M) = -2\pi\chi(M) \\ &= -2\pi(\nu(M) - \varepsilon(M) + \phi(M)).\end{aligned}$$

Since M is a triangulation, we know that

$$2\varepsilon(M) = 3\phi(M).$$

Notice that the sum of all the angles in the triangles on the surface $\mathcal{S}$ is $2\pi\nu(M)$, we get that

$$\begin{aligned}\phi(M)\mu(\Delta) &= -2\pi(\nu(M) - \varepsilon(M) + \phi(M)) = (2\nu(M) - \phi(M))\pi \\ &= \sum_{i=1}^{\phi(M)} [(\eta + \theta + \sigma) - \pi] = \phi(M)(\eta + \theta + \sigma - \pi).\end{aligned}$$

Whence, we get that

$$\mu(\Delta) = \eta + \theta + \sigma - \pi. \qquad \natural$$

§3. A combinatorial refinement of Huriwtz theorem

In 1893, Hurwitz obtained a famous result for the orientation-preserving automorphism group $\mathrm{Aut}^+\mathcal{S}$ of a Riemann surface $\mathcal{S}$([11][18][22]):

For a Riemann surface $\mathcal{S}$ of genus $g(\mathcal{S}) \geq 2$, $\mathrm{Aut}^+\mathcal{S} \leq 84(g(\mathcal{S}) - 1)$.

We have known that the maps are the combinatorial model for Klein surfaces, especially, the Riemann surfaces. What is its combinatorial counterpart? What we can say for the automorphisms of a map?

For a given graph Γ, define a *graphical property* P to be its a kind of subgraphs, such as, regular subgraphs, circuits, trees, stars, wheels, $\cdots$. Let $M = (\mathcal{X}_{\alpha,\beta}, \mathcal{P})$ be

a map. Call a subset A of $\mathcal{X}_{\alpha,\beta}$ has the graphical property P if the underlying graph of A has property P. Denote by $\mathcal{A}(P, M)$ the set of all the A subset with property P in the map M.

For refinement the Huriwtz theorem, we get a general combinatorial result in the following.

Theorem 2.3.1 *Let $M = (\mathcal{X}_{\alpha,\beta}, \mathcal{P})$ be a map. Then for $\forall G \preceq \mathrm{Aut}M$,*

$$[|v^G||v \in V(M)] \mid |G|$$

and

$$|G| \mid |A||\mathcal{A}(P, M)|,$$

where, $[a, b, \cdots]$ denotes least common multiple of $a, b, \cdots$.

Proof According to a well-known result in the permutation group theory, for $\forall v \in V(M)$, we know $|G| = |G_v||v^G|$. Therefore, $|v^G| \mid |G|$. Whence,

$$[|v^G||v \in V(M)] \mid |G|.$$

The group G is fixed-free action on $\mathcal{X}_{\alpha,\beta}$, i.e., $\forall x \in \mathcal{X}_{\alpha,\beta}$, we have $|G_x| = 1$ (see also [28]).

Now we consider the action of the automorphism group G on $\mathcal{A}(P, M)$. Notice that if $A \in \mathcal{A}(P, M)$, then then $\forall g \in G, A^g) \in \mathcal{A}(P, M)$, i.e., $A^G \subseteq \mathcal{A}(P, M)$. That is, the action of G on $\mathcal{A}(P, M)$ is closed. Whence, we can classify the elements in $\mathcal{A}(P, M)$ by G. For $\forall x, y \in \mathcal{A}(P, M)$, define $x \sim y$ if and only if there is an element $g, g \in G$ such that $x^g = y$.

Since $|G_x| = 1$, i.e., $|x^G| = |G|$, we know that each orbit of G action on $\mathcal{X}_{\alpha,\beta}$ has a same length $|G|$. By the previous discussion, the action of G on $\mathcal{A}(P, M)$ is closed, therefore, the length of each orbit of G action on $\mathcal{A}(P, M)$ is also $|G|$. Notice that there are $|A||\mathcal{A}(P, M)|$ quadricells in $\mathcal{A}(P, M)$. We get that

$$|G| \mid |A||\mathcal{A}(P, M)|.$$

This completes the proof. $\natural$

Choose property P to be tours with each edge appearing at most 2 in the map M. Then we get the following results by the Theorem 2.3.1.

Corollary 2.3.1 *Let $\mathcal{T}r_2$ be the set of tours with each edge appearing 2 times. Then for $\forall G \preceq \mathrm{Aut}M$,*

$$|G| \mid (l|\mathcal{T}r_2|,\ l = |T| = \frac{|T|}{2} \geq 1,\ T \in \mathcal{T}r_2,).$$

Let $\mathcal{T}r_1$ be the set of tours without repeat edges. Then

$$|G| \mid (2l|\mathcal{T}r_1|, l = |T| = \frac{|T|}{2} \geq 1,\ T \in \mathcal{T}r_1,).$$

Particularly, denote by $\phi(i,j)$ the number of faces in M with facial length i and singular edges j, then

$$|G| \mid ((2i-j)\phi(i,j), i, j \geq 1),$$

where,$(a, b, \cdots)$ denotes the greatest common divisor of $a, b, \cdots$.

Corollary 2.3.2 *Let $\mathcal{T}$ be the set of trees in the map M. Then for $\forall G \preceq \mathrm{Aut}M$,*

$$|G| \mid (2lt_l, l \geq 1),$$

where t_l denotes the number of trees with l edges.

Corollary 2.3.3 *Let v_i be the number of vertices with valence i. Then for $\forall G \preceq \mathrm{Aut}M$,*

$$|G| \mid (2iv_i, i \geq 1).$$

Theorem 2.3.1 is a combinatorial refinement of the Hurwitz theorem. Applying it, we can get the automorphism group of a map as follows.

Theorem 2.3.2 *Let M be an orientable map of genus $g(M) \geq 2$. Then for $\forall G \preceq \mathrm{Aut}^+M$,*

$$|G| \ \leq\ 84(g(M)-1)$$

and for $\forall G \preceq \mathrm{Aut}M$,

$$|G| \leq 168(g(M)-1).$$

Proof Define the average vertex valence $\overline{\nu(M)}$ and the average face valence $\overline{\phi(M)}$ of a map M by

$$\overline{\nu(M)} = \frac{1}{\nu(M)} \sum_{i \geq 1} i\nu_i,$$

$$\overline{\phi(M)} = \frac{1}{\phi(M)} \sum_{j \geq 1} j\phi_j,$$

where,$\nu(M)$,$\phi(M)$,$\phi(M)$ and ϕ_j denote the number of vertices, faces, vertices of valence i and faces of valence j, respectively.

Then we know that $\overline{\nu(M)}\nu(M) = \overline{\phi(M)}\phi(M) = 2\varepsilon(M)$. Whence, $\nu(M) = \frac{2\varepsilon(M)}{\overline{\nu(M)}}$ and $\phi(M) = \frac{2\varepsilon(M)}{\overline{\phi(M)}}$. According to the Euler formula, we have that

$$\nu(M) - \varepsilon(M) + \phi(M) = 2 - 2g(M),$$

where,$\varepsilon(M), g(M)$ denote the number of edges and genus of the map M. We get that

$$\varepsilon(M) = \frac{2(g(M)-1)}{(1 - \frac{2}{\overline{\nu(M)}} - \frac{2}{\overline{\phi(M)}})}.$$

Choose the integers $k = \lceil \overline{\nu(M)} \rceil$ and $l = \lceil \overline{\phi(M)} \rceil$. We have that

$$\varepsilon(M) \leq \frac{2(g(M)-1)}{(1 - \frac{2}{k} - \frac{2}{l})}.$$

Because $1 - \frac{2}{k} - \frac{2}{l} > 0$, So $k \geq 3, l > \frac{2k}{k-2}$. Calculation shows that the minimum value of $1 - \frac{2}{k} - \frac{2}{l}$ is $\frac{1}{21}$ and attains the minimum value if and only if $(k,l) = (3,7)$ or $(7,3)$. Therefore,

$$\varepsilon(M \leq 42(g(M)-1)).$$

According to the Theorem 2.3.1 and its corollaries, we know that $|G| \leq 4\varepsilon(M)$ and if G is orientation-preserving, then $|G| \leq 2\varepsilon(M)$. Whence,

$$|G| \ \leq \ 168(g(M)-1))$$

and if G is orientation-preserving, then

$$|G| \ \leq \ 84(g(M)-1)),$$

with equality hold if and only if $G = \mathrm{AutM}, (k,l) = (3,7)$ or $(7,3)$。 ♮

For the automorphism of a Riemann surface, we have

Corollary 2.3.4 *For any Riemann surface $\mathcal{S}$ of genus $g \geq 2$,*

$$4g(\mathcal{S}) + 2 \leq |\mathrm{Aut}^{+}\mathcal{S}| \leq 84(g(\mathcal{S}) - 1)$$

and

$$8g(\mathcal{S}) + 4 \leq |\mathrm{Aut}\mathcal{S}| \leq 168(g(\mathcal{S}) - 1).$$

Proof By the Theorem 1.2.6 and 2.3.2, we know the upper bound for $|\mathrm{Aut}\mathcal{S}|$ and $|\mathrm{Aut}^{+}\mathcal{S}|$. Now we prove the lower bound. We construct a regular map $M_k = (\mathcal{X}_k, \mathcal{P}_k)$ on a Riemann surface of genus $g \geq 2$ as follows, where $k = 2g+1$.

$$\mathcal{X}_k = \{x_1, x_2, \cdots, x_k, \alpha x_1, \alpha x_2, \cdots, \alpha x_k, \beta x_1, \beta x_2, \cdots, \beta x_k, \alpha\beta x_1, \alpha\beta x_2, \cdots, \alpha\beta x_k\}$$

$$\mathcal{P}_k = (x_1, x_2, \cdots, x_k, \alpha\beta x_1, \alpha\beta x_2, \cdots, \alpha\beta x_k)(\beta x_k, \cdots, \beta x_2, \beta x_1, \alpha x_k, \cdots, \alpha x_2, \alpha x_1).$$

It can be shown that M_k is a regular map, and its orientation-preserving automorphism group $\mathrm{Aut}^{+}M_k =< \mathcal{P}_k >$. Direct calculation shows that if $k \equiv 0(mod 2)$, M_k has 2 faces, and if $k \equiv 1$, M_k is an one face map. Therefore, according to the Theorem 1.2.6, we get that

$$|\mathrm{Aut}^{+}\mathcal{S}| \geq 2\varepsilon(M_k) \geq 4g + 2,$$

and

$$|\mathrm{Aut}\mathcal{S}| \geq 4\varepsilon(M_k) \geq 8g + 4. \qquad ♮$$

For the non-orientable case, we can also get the bound for the automorphism group of a map.

Theorem 2.3.3 *Let M be a non-orientable map of genus $g'(M) \geq 3$. Then for $\forall G \preceq \mathrm{Aut}^+ M$,*

$$|G| \ \leq \ 42(g'(M) - 2)$$

and for $\forall G \preceq \mathrm{Aut} M$,

$$|G| \leq 84(g'(M) - 2),$$

with the equality hold iff M is a regular map with vertex valence 3 and face valence 7 or vice via.

Proof Similar to the proof of the Theorem 2.3.2, we can also get that

$$\varepsilon(M \leq 21(g'(M) - 2))$$

and with equality hold if and only if $G = \mathrm{AutM}$ and M is a regular map with vertex valence 3, face valence 7 or vice via. According to the Corollary 2.3.3, we get that

$$|G| \leq 4\varepsilon(M)$$

and if G is orientation-preserving, then

$$|G| \leq 2\varepsilon(M).$$

Whence, for $\forall G \preceq \mathrm{Aut}^+ M$,

$$|G| \ \leq \ 42(g'(M) - 2)$$

and for $\forall G \preceq \mathrm{Aut} M$,

$$|G| \leq 84(g'(M) - 2),$$

with the equality hold iff M is a regular map with vertex valence 3 and face valence 7 or vice via. $\natural$

Similar to the Hurwtiz theorem for a Riemann surface, we can get the upper bound for a Klein surface underlying a non-orientable surface.

Corollary 2.3.5 *For any Klein surface $\mathcal{K}$ underlying a non-orientable surface of genus $q \geq 3$,*

$$|\mathrm{Aut}^{+}\mathcal{K}| \leq 42(q-2)$$

and

$$|\mathrm{Aut}\mathcal{K}| \leq 84(q-2).$$

According to the Theorem 1.2.8, similar to the proof of the Theorem 2.3.2 and 2.3.3, we get the following result for the automorphisms of an s-manifold as follows.

Theorem 2.3.4 *Let $\mathcal{C}(T,n)$ be a closed s-manifold with negative Euler characteristic. Then $|\mathrm{Aut}\mathcal{C}(T,n)| \leq 6n$ and*

$$|\mathrm{Aut}\mathcal{C}(T,n)| \leq -21\chi(\mathcal{C}(T,n)),$$

with equality hold only if $\mathcal{C}(T,n)$ is hyperbolic, where $\chi(\mathcal{C}(T,n))$ denotes the genus of $\mathcal{C}(T,n)$.

Proof The inequality $|\mathrm{Aut}\mathcal{C}(T,n)| \leq 6n$ is known by the Corollary 2.3.1. Similar to the proof of the Theorem 2.3.2, we know that

$$\varepsilon(\mathcal{C}(T,n)) = \frac{-\chi(\mathcal{C}(T,n))}{\frac{1}{3}-\frac{2}{k}},$$

where $k = \frac{1}{\nu(\mathcal{C}(T,n))}\sum\limits_{i\geq 1} i\nu_i \leq 7$ and with the equality holds only if $k=7$, i.e., $\mathcal{C}(T,n)$ is hyperbolic. $\natural$

§4. The order of an automorphism of a Klein surface

Harvey [26] in 1966, Singerman [60] in 1971 and Bujalance [9] in 1983 considered the order of an automorphism of a Riemann surface of genus $p \geq 2$ and a compact non-orientable Klein surface without boundary of genus $q \geq 3$. Their approach is

by using the Fuchsian groups and NEC groups for Klein surfaces. The central idea is by applying the *Riemann-Hurwitz equation*, stated as follows:

Let G be an NEC graph and G' be a subgroup of G with finite index. Then

$$\frac{\mu(G')}{\mu(G)} = [G : G'],$$

where, $\mu(G)$ denotes the non-Euclid area of the group G, which is defined as if

$$\sigma = (g; \pm; [m_1, \cdots, m_r]; \{(n_{11,\cdots,n_{1s_1}}), \cdots, (n_{k1}, \cdots, n_{ks})\})$$

is the signature of the group G, then

$$\mu(G) = 2\pi[\eta g + k - 2 + \sum_{i=1}^{r}(1 - 1/m_i) + 1/2\sum_{i=1}^{k}\sum_{j=1}^{s_i}(1 - 1/n_{ij})],$$

where, $\eta = 2$ if $sign(\sigma) = +$ and $\eta = 1$ otherwise.

Notice that we have introduced the conception of non-Euclid area for the voltage maps and have gotten the Riemann-Hurwitz equation in the Theorem 2.2.6 for a fixed-free on $V(M)$ group. Similarly, we can find the minimum genus of a map, fixed-free on its vertex set by the voltage assignment on its quotient map and the maximum order of an automorphism of a map.

4.1 **The minimum genus of a fixed-free automorphism**

Lemma 2.4.1 Let $N = \prod_{i=1}^{k} p_i^{r_i}, p_1 < p_2 < \cdots < p_k$ be the arithmetic decomposition of the integer N and $m_i \geq 1, m_i|N$ for $i = 1, 2, \cdots, k$. Then for any integer $s \geq 1$,

$$\sum_{i=1}^{s}(1 - \frac{1}{m_i}) \geq 2(1 - \frac{1}{p_1})\lfloor\frac{s}{2}\rfloor.$$

Proof If $s \equiv 0(mod 2)$, it is obvious that

$$\sum_{i=1}^{s}(1 - \frac{1}{m_i}) \geq \sum_{i=1}^{s}(1 - \frac{1}{p_1}) \geq (1 - \frac{1}{p_1})s.$$

Now assume that $s \equiv 1(mod 2)$ and there are $m_{i_j} \neq p_1, j = 1, 2, \cdots, l$. If the assertion is not true, we must have that

$$(1-\frac{1}{p_1})(l-1) \ > \sum_{j=1}^{l}(1-\frac{1}{m_{i_j}}) \geq (1-\frac{1}{p_2})l.$$

Whence, we get that

$$(1-\frac{1}{p_1})l \ > (1-\frac{1}{p_2})l+1-\frac{1}{p_1} \ > (1-\frac{1}{p_1})l.$$

A contradiction. Therefore, we have that

$$\sum_{i=1}^{s}(1-\frac{1}{m_i}) \geq 2(1-\frac{1}{p_1})\lfloor\frac{s}{2}\rfloor. \qquad \natural$$

Lemma 2.4.2 *For a map $M=(\mathcal{X}_{\alpha,\beta},\mathcal{P})$ with $\phi(M)$ faces and $N=\prod_{i=1}^{k}p_i^{r_i}, p_1<p_2<\cdots<p_k$, the arithmetic decomposition of the integer N, there exists a voltage assignment $\vartheta:\mathcal{X}_{\alpha,\beta}\to Z_N$ such that for $\forall F\in F(M)$, $o(F)=p_1$ if $\phi(M)\equiv 0(mod 2)$ or there exists a face $F_0\in F(M)$, $o(F)=p_1$ for $\forall F\in F(M)\setminus\{F_0\}$, but $o(F_0)=1$.*

Proof Assume that $f_1,f_2,\cdots,f_n$, where,$n=\phi(M)$, are the n faces of the map M. By the definition of voltage assignment, if $x,\beta x$ or $x,\alpha\beta x$ appear on one face $f_i, 1\leq i\leq n$ altogether, then they contribute to $\vartheta(f_i)$ only with $\vartheta(x)\vartheta^{-1}(x)=\mathbf{1}_{Z_N}$. Whence, not loss of generality, we only need to consider the voltage x_{ij} on the common boundary among the face f_i and f_j for $1\leq i,j\leq n$. Then the voltage assignment on the n faces are

$$\vartheta(f_1)=x_{12}x_{13}\cdots x_{1n},$$

$$\vartheta(f_2)=x_{21}x_{23}\cdots x_{2n},$$

$$\cdots\cdots\cdots\cdots\cdots\cdots$$

$$\vartheta(f_n)=x_{n1}x_{n2}\cdots x_{n(n-1)}.$$

We wish to find an assignment on M which can enables us to get as many faces as possible with the voltage of order p_1. Not loss of generality, we can choose $\vartheta^{p_1}(f_1)=\mathbf{1}_{Z_N}$ in the first. To make $\vartheta^{p_1}(f_2)=\mathbf{1}_{Z_N}$, choose $x_{23}=x_{13}^{-1},\cdots,x_{2n}=x_{1n}^{-1}$.

If we have gotten $\vartheta^{p_1}(f_i) = \mathbf{1}_{Z_N}$ and $i < n$ if $n \equiv 0(mod2)$ or $i < n-1$ if $n \equiv 1(mod2)$, we can choose that

$$x_{(i+1)(i+2)} = x^{-1}_{i(i+2)}, x_{(i+1)(i+3)} = x^{-1}_{i(i+3)}, \cdots, x_{(i+1)n} = x^{-1}_{in},$$

which also make $\vartheta^{p_1}(f_{i+1}) = \mathbf{1}_{Z_N}$.

Now if $n \equiv 0(mod2)$, this voltage assignment makes each face $f_i, 1 \leq i \leq n$ satisfying that $\vartheta^{p_1}(f_i) = \mathbf{1}_{Z_N}$. But if $n \equiv 1(mod2)$, it only makes $\vartheta^{p_1}(f_i) = \mathbf{1}_{Z_N}$ for $1 \leq i \leq n-1$, but $\vartheta(f_n) = \mathbf{1}_{Z_N}$. This completes the proof. $\natural$

Now we can prove a result for the minimum genus of a fixed-free automorphism of a map.

Theorem 2.4.1 *Let $M = (\mathcal{X}_{\alpha,\beta}, \mathcal{P})$ be a map and $N = p_1^{r_1} \cdots p_k^{r_k}, p_1 < p_2 < \cdots < p_k$, be the arithmetic decomposition of the integer N. Then for any voltage assignment $\vartheta : \mathcal{X}_{\alpha,\beta} \to Z_N$,*

(i) if M is orientable, the minimum genus g_{min} of the lifting map M^ϑ which admits an automorphism of order N, fixed-free on $V(M^\vartheta)$, is

$$g_{min} = 1 + N\{g(M) - 1 + (1 - \sum_{m \in \mathcal{O}(F(M))} \frac{1}{p_1})\lfloor \frac{\phi(M)}{2} \rfloor\}.$$

(ii) if M is non-orientable, the minimum genus g'_{min} of the lifting map M^ϑ which admits an automorphism of order N, fixed-free on $V(M^\vartheta)$, is

$$g'_{min} = 2 + N\{g(M) - 2 + 2(1 - \frac{1}{p_1})\lfloor \frac{\phi(M)}{2} \rfloor\}. \qquad \natural$$

Proof (i) According to the Theorem 2.2.1, we know that

$$2 - 2g(M^\vartheta) = N\{(2 - 2g(M)) + \sum_{m \in \mathcal{O}(F(M))} (-1 + \frac{1}{m})\}.$$

Whence,

$$2g(M^\vartheta) = 2 + N\{2g(M) - 2 + \sum_{m \in \mathcal{O}(F(M))} (1 - \frac{1}{m})\}.$$

Applying the Lemma 2.4.1 and 2.4.2, we get that

$$g_{min} = 1 + N\{g(M) - 1 + (1 - \frac{1}{p_1})\lfloor\frac{\phi(M)}{2}\rfloor\}$$

.

(ii) Similarly, by the Theorem 2.2.1, we know that

$$2 - g(M^{\vartheta}) = N\{(2 - g(M)) + \sum_{m\in\mathcal{O}(F(M))}(-1 + \frac{1}{m})\}.$$

Whence,

$$g(M^{\vartheta}) = 2 + N\{g(M) - 2 + \sum_{m\in\mathcal{O}(F(M))}(1 - \frac{1}{m})\}.$$

Applying the Lemma 2.4.1 and 2.4.2, we get that

$$g'_{min} = 2 + N\{g(M) - 2 + 2(1 - \frac{1}{p_1})\lfloor\frac{\phi(M)}{2}\rfloor\}. \qquad \natural$$

4.2 **The maximum order of an automorphism of a map**

For the maximum order of an automorphism of a map, we have the following result.

Theorem 2.4.2 *The maximum order N_{max} of an automorphism g of an orientable map M of genus≥ 2 is*

$$N_{max} \leq 2g(M) + 1$$

and the maximum order N'_{max} of a non-orientable map of genus≥ 3 is

$$N'_{max} \leq g(M) + 1,$$

where $g(M)$ is the genus of the map M.

Proof According to the Theorem 2.2.3, denote $G =< g >$, we get that

$$\chi(M) + \sum_{g\in G, g\neq \mathbf{1}_G}(|\Phi_v(g)| + |\Phi_f(g)|) = |G|\chi(M/G),$$

where, $\Phi_f(g) = \{F|F \in F(M), F^g = F\}$ and $\Phi_v(g) = \{v|v \in V(M), v^g = v\}$. If $g \neq \mathbf{1}_G$, direct calculation shows that $\Phi_f(g) = \Phi_f(g^2)$ and $\Phi_v(g) = \Phi_v(g^2)$. Whence,

$$\sum_{g\in G, g\neq \mathbf{1}_G} |\Phi_v(g)| = (|G|-1)|\Phi_v(g)|$$

and

$$\sum_{g\in G, g\neq \mathbf{1}_G} |\Phi_f(g)| = (|G|-1)|\Phi_f(g)|.$$

Therefore, we get that

$$\chi(M) + (|G|-1)|\Phi_v(g)| + (|G|-1)|\Phi_f(g)| = |G|\chi(M/G)$$

Whence, we have that

$$\chi(M) - (|\Phi_v(g)| + |\Phi_f(g)|) = |G|(\chi(M/G) - (|\Phi_v(g)| + |\Phi_f(g)|)).$$

If $\chi(M/G) - (|\Phi_v(g)| + |\Phi_f(g)|) = 0$,i.e., $\chi(M/G) = |\Phi_v(g)| + |\Phi_f(g)| \geq 0$, then we get that $g(M) \leq 1$ if M is orientable or $g(M) \leq 2$ if M is non-orientable. Contradicts to the assumption. Therefore, $\chi(M/G) - (|\Phi_v(g)| + |\Phi_f(g)|) \neq 0$. Whence, we get that

$$|G| = \frac{\chi(M) - (|\Phi_v(g)| + |\Phi_f(g)|)}{\chi(M/G) - (|\Phi_v(g)| + |\Phi_f(g)|)} = H(v, f; g).$$

Notice that $|G|, \chi(M) - (|\Phi_v(g)| + |\Phi_f(g)|)$ and $\chi(M/G) - (|\Phi_v(g)| + |\Phi_f(g)|)$ are integers. We know that the function $H(v, f; g)$ takes its maximum value at $\chi(M/G) - (|\Phi_v(g)| + |\Phi_f(g)|) = -1$ since $\chi(M) \leq -1$. But in this case, we get that

$$|G| = |\Phi_v(g)| + |\Phi_f(g)| - \chi(M) = 1 + \chi(M/G) - \chi(M).$$

We divide the discussion into to cases.

Case 1 M is orientable.

Since $\chi(M/G) + 1 = (|\Phi_v(g)| + |\Phi_f(g)|) \geq 0$, we know that $\chi(M/G) \geq -1$. Whence, $\chi(M/G) = 0$ or 2. Therefore, we have that

$$|G| = 1 + \chi(M/G) - \chi(M) \leq 3 - \chi(M) = 2g(M) + 1.$$

That is, $N_{max} \leq 2g(M) + 1$.

Case 2 M is non-orientable.

In this case, since $\chi(M/G) \geq -1$, we know that $\chi(M/G) = -1, 0, 1$ or 2. Whence, we have that

$$|G| = 1 + \chi(M/G) - \chi(M) \leq 3 - \chi(M) = g(M) + 1.$$

This completes the proof. $\natural$

According to this theorem, we get the following result for the order of an automorphism of a Klein surface without boundary by the Theorem 1.2.7, which is even more better than the results already known.

Corollary 2.4.1 *The maximum order of an automorphism of a Riemann surface of genus*≥ 2 *is* $2g(M) + 1$*, and the maximum order of an automorphism of a non-orientable Klein surface of genus*≥ 3 *without boundary is* $g(M) + 1$*.*

The maximum order of an automorphism of a map can be also determined by its underlying graph, which is stated as follows.

Theorem 2.4.3 *Let* M *be a map underlying the graph* G *and* $o_{max}(M, g), o_{max}(G, g)$ *be the maximum order of orientation-preserving automorphism in* $\mathrm{Aut}M$ *and in* $\mathrm{Aut}_{\frac{1}{2}}G$*. Then*

$$o_{max}(M, g) \ \leq \ o_{max}(G, g),$$

and the equality hold for at least one map underlying the graph G.

The proof of the Theorem 2.4.3 will be delayed to the next chapter after we prove the Theorem 3.1.1. By this theorem, we get the following interesting results.

Corollary 2.4.2 *The maximum order of an orientation-preserving automorphism of a complete map* $\mathcal{K}_n, n \geq 3$*, is at most* n*.*

Corollary 2.4.3 *The maximum order of an orientation-preserving automorphism of a plane tree* $\mathcal{T}$ *is at most* $|\mathcal{T}| - 1$ *and attains the upper bound only if the underlying tree is the star.*

Chapter 3 On the Automorphisms of a Graph on Surfaces

For determining the automorphisms of a map, an alternate approach is to consider the action of the semi-arc automorphism group of its underlying graph on the quadricells and to distinguish which is an automorphism of the map and which is not. This approach is first appeared in the reference [43] as an initial step for the enumeration of the non-equivalent embeddings of a graph on surfaces, and also important for enumeration unrooted maps underlying a graph on surfaces used in Chapter 4.

§1. A necessary and sufficient condition for a group of a graph being that of a map

Let $\Gamma = (V, E)$ be a connected graph. Its automorphism is denoted by $Aut\Gamma$. Choose the base set $X = E(\Gamma)$. Then its quadricells $\mathcal{X}_{\alpha,\beta}$ is defined to be:

$$\mathcal{X}_{\alpha,\beta} = \bigcup_{x \in X} \{x, \alpha x, \beta x, \beta\alpha\beta x\},$$

where, $K = \{1, \alpha, \beta, \alpha\beta\}$ is the Klein 4- elements group.

For $\forall g \in \mathrm{Aut}\Gamma$, define an *induced action* $g|^{\mathcal{X}_{\alpha,\beta}}$ of g on $\mathcal{X}_{\alpha,\beta}$ as follows.

For $\forall x \in \mathcal{X}_{\alpha,\beta}$, if $x^g = y$, then define $(\alpha x)^g = \alpha y$, $(\beta x)^g = \beta y$ and $(\alpha\beta x)^g = \alpha\beta y$.

Let $M = (\mathcal{X}_{\alpha,\beta}, \mathcal{P})$ be a map. According to the Theorem 1.2.5, for an automorphism $g \in \mathrm{Aut}M$ and $g|_{V(M)} : u \to v,\ u, v \in V(M)$, if $u^g = v$, then call g an *orientation-preserving automorphism*. if $u^g = v^{-1}$, then call g an *orientation-reversing automorphism*. For any $g \in \mathrm{Aut}M$, it is obvious that $g|_\Gamma$ *is orientation-preserving or orientation-reversing and the product of two orientation-preserving automorphisms or orientation-reversing automorphisms is orientation-preserving, the product of an orientation-preserving automorphism with an orientation-reversing automorphism is orientation-reversing.*

For a subgroup $G \preceq \mathrm{Aut}M$, define $G^+ \preceq G$ being the orientation-preserving subgroup of G. Then the index of G^+ in G is 2. Assume the vertex v to be $v = (x_1, x_2, \cdots, x_{\rho(v)})(\alpha x_{\rho(v)}, \cdots, \alpha x_2, \alpha x_1)$. Denote by $< v >$ the cyclic group generated by v. Then we get the following property for the automorphisms of a map.

Lemma 3.1.1 *Let $G \preceq \mathrm{Aut}M$ be an automorphism group of a map M. Then $\forall v \in V(M)$,*

(i) if $\forall g \in G$,g is orientation-preserving, then $G_v \preceq < v >$, is a cyclic group;

(ii) $G_v \preceq < v > \times < \alpha >$.

Proof (i)Let $M = (\mathcal{X}_{\alpha,\beta}, \mathcal{P})$. since for any $\forall g \in G$, g is orientation-preserving, we know for $\forall v \in V(M), h \in G_v$, $v^h = v$. Assume the vertex

$$v = (x_1, x_2, \cdots, x_{\rho(v)})(\alpha x_{\rho(v)}, \alpha x_{\rho(v)-1}, \cdots, \alpha x_1).$$

Then

$$[(x_1, x_2, \cdots, x_{\rho(v)})(\alpha x_{\rho(v)}, \cdots, \alpha x_2, \alpha x_1)]^h = (x_1, x_2, \cdots, x_{\rho(v)})(\alpha x_{\rho(v)}, \cdots, \alpha x_2, \alpha x_1).$$

Therefore, if $h(x_1) = x_{k+1}, 1 \leq k \leq \rho(v)$, then

$$h = [(x_1, x_2, \cdots, x_{\rho(v)})(\alpha x_{\rho(v)}, \alpha x_{\rho(v)-1}, \cdots, \alpha x_1)]^k = v^k.$$

If $h(x_1) = \alpha x_{\rho(v)-k+1}, 1 \leq k \leq \rho(v)$, then

$$h = [(x_1, x_2, \cdots, x_{\rho(v)})(\alpha x_{\rho(v)}, \alpha x_{\rho(v)-1}, \cdots, \alpha x_1)]^k \alpha = v^k \alpha.$$

But if $h = v^k \alpha$, then we know that $v^h = v^\alpha = v^{-1}$, i.e., h is not orientation-preserving. Whence, $h = v^k, 1 \leq k \leq \rho(v)$, i.e., each element in G_v is the power of v. Assume ξ is the least power of elements in G_v. Then $G_v =< v^\xi > \preceq < v >$ is a cyclic group generated by v^ξ.

(ii)For $\forall g \in G_v$, $v^g = v$, i.e.,

$$[(x_1, x_2, \cdots, x_\rho)(\alpha x_\rho, \alpha x_{\rho-1}, \cdots, \alpha x_1)]^g = (x_1, x_2, \cdots, x_\rho)(\alpha x_\rho, \alpha x_{\rho-1}, \cdots, \alpha x_1).$$

Similar to the proof of (i), we know there exists an integer $s, 1 \leq s \leq \rho$, such that $g = v^s$ or $g = v^s\alpha$. Whence, $g \in < v >$ or $g \in < v > \alpha$, i.e.,

$$G_v \preceq < v > \times < \alpha > . \qquad \natural$$

Lemma 3.1.2 *Let Γ be a connected graph. If $G \preceq \mathrm{Aut}\Gamma$, and $\forall v \in V(\Gamma)$,$G_v \preceq < v > \times < \alpha >$, then the action of G on $\mathcal{X}_{\alpha,\beta}$ is fixed-free.*

Proof Choose a quadricell $x \in \mathcal{X}_{\alpha,\beta}$. We prove that $G_x = \{\mathbf{1}_G\}$. In fact, if $g \in G_x$, then $x^g = x$. Particularly, the incident vertex u is stable under the action of g, i.e., $u^g = u$. assume

$$u = (x, y_1, \cdots, y_{\rho(u)-1})(\alpha x, \alpha y_{\rho(u)-1}, \cdots, \alpha y_1),$$

then since $G_u \preceq < u > \times < \alpha >$, we get that

$$x^g = x, y_1^g = y_1, \cdots, y_{\rho(u)-1}^g = y_{\rho(u)-1}$$

and

$$(\alpha x)^g = \alpha x, (\alpha y_1)^g = \alpha y_1, \cdots, (\alpha y_{\rho(u)-1})^g = \alpha y_{\rho(u)-1},$$

that is, for any quadricell e_u incident with the vertex u, $e_u^g = e_u$. According to the definition of the induced action $\mathrm{Aut}\Gamma$ on $\mathcal{X}_{\alpha,\beta}$, we know that

$$(\beta x)^g = \beta x, (\beta y_1)^g = \beta y_1, \cdots, (\beta y_{\rho(u)-1})^g = \beta y_{\rho(u)-1}$$

and

$$(\alpha\beta x)^g = \alpha\beta x, (\alpha\beta y_1)^g = \alpha\beta y_1, \cdots, (\alpha\beta y_{\rho(u)-1})^g = \alpha\beta y_{\rho(u)-1}.$$

Whence, for any quadricell $y \in \mathcal{X}_{\alpha,\beta}$, assume the incident vertex of y is w, then by the connectivity of the graph Γ, we know that there is a path $P(u, w) = uv_1v_2 \cdots v_s w$ in Γ connecting the vertex u and$w$. Not loss of generality, we assume that βy_k is incident with the vertex v_1. Since $(\beta y_k)^g = \beta y_k$ and $G_{v_1} \preceq < v_1 > \times < \alpha >$, we know that for any quadricell e_{v_1} incident with the vertex v_1, $e_{v_1}^g = e_{v_1}$.

Similarly, if a quadricell e_{v_i} incident with the vertex v_i is stable under the action of g, i.e., $(e_{v_i})^g = e_{v_i}$, then we can prove that any quadricell $e_{v_{i+1}}$ incident with the vertex v_{i+1} is stable under the action of g. This process can be well done until we arrive the vertex w. Therefore, we can get that any quadricell e_w incident with the vertex w is stable under the action of g. Particularly, we have that $y^g = y$.

Therefore, we get that $g = \mathbf{1}_G$. Whence,$G_x = \{\mathbf{1}_G\}$. $\natural$

Now we prove a necessary and sufficient condition for a subgroup of a graph being an automorphism group of a map underlying this graph.

Theorem 3.1.1 *Let Γ be a connected graph. If $G \preceq \mathrm{Aut}\Gamma$, then G is an automorphism group of a map underlying the graph Γ iff for $\forall v \in V(\Gamma)$, the stabler $G_v \preceq < v > \times < \alpha >$.*

Proof According to the Lemma 3.1.1(ii), the condition of the Theorem 3.1.1 is necessary. Now we prove its sufficiency.

By the Lemma 3.1.2, we know that the action of G on $\mathcal{X}_{\alpha,\beta}$ is fixed-free, i.e., for$\forall x \in \mathcal{X}_{\alpha,\beta}$, $|G_x| = 1$. Whence, the length of orbit of x under the action G is $|x^G| = |G_x||x^G| = |G|$, i.e., for $\forall x \in \mathcal{X}_{\alpha,\beta}$, the length of x under the action of G is $|G|$.

Assume that there are s orbits $O_1, O_2, \cdots, O_s$ of G action on 在 $V(\Gamma)$, where, $O_1 = \{u_1, u_2, \cdots, u_k\}$, $O_2 = \{v_1, v_2, \cdots, v_l\}$,$\cdots$,$O_s = \{w_1, w_2, \cdots, w_t\}$. We construct the conjugatcy permutation pair for every vertex in the graph Γ such that they product $\mathcal{P}$ is stable under the action of G.

Notice that for $\forall u \in V(\Gamma)$, since $|G| = |G_u||u^G|$, we know that $[k, l, \cdots, t]|\ |G|$.

In the first, we determine the conjugate permutation pairs for each vertex in the orbit O_1. Choose any vertex $u_1 \in O_1$, assume that the stabler G_{u_1} is $\{1_G, g_1, g_2g_1, \cdots, \prod\limits_{i=1}^{m-1} g_{m-i}\}$, where, $m = |G_{u_1}|$ and the quadricells incident with vertex u_1 is $\widetilde{N(u_1)}$ in the graph Γ . We arrange the elements in $\widetilde{N(u_1)}$ as follows.

Choose a quadricell $u_1^a \in \widetilde{N(u_1)}$. We use G_{u_1} action on u_1^a and αu_1^a, respectively. Then we get the quadricell set $A_1 = \{u_1^a, g_1(u_1^a), \cdots, \prod\limits_{i=1}^{m-1} g_{m-i}(u_1^a)\}$ and $\alpha A_1 = \{\alpha u_1^a, \alpha g_1(u_1^a), \cdots, \alpha \prod\limits_{i=1}^{m-1} g_{m-i}(u_1^a)\}$. By the definition of the action of an automorphism of a graph on its quadricells we know that $A_1 \bigcap \alpha A_1 = \emptyset$. Arrange the elements in A_1 as $\overrightarrow{A_1} = u_1^a, g_1(u_1^a), \cdots, \prod\limits_{i=1}^{m-1} g_{m-i}(u_1^a)$.

If $\widetilde{N(u_1)} \setminus A_1 \bigcup \alpha A_1 = \emptyset$, then the arrangement of elements in $\widetilde{N(u_1)}$ is $\overrightarrow{A_1}$. If $\widetilde{N(u_1)} \setminus A_1 \bigcup \alpha A_1 \neq \emptyset$, choose a quadricell $u_1^b \in \widetilde{N(u_1)} \setminus A_1 \bigcup \alpha A_1$. Similarly, using the group G_{u_1} acts on u_1^b, we get that $A_2 = \{u_1^b, g_1(u_1^b), \cdots, \prod\limits_{i=1}^{m-1} g_{m-i}(u_1^b)\}$ and $\alpha A_2 = \{\alpha u_1^b, \alpha g_1(u_1^b), \cdots, \alpha \prod\limits_{i=1}^{m-1} g_{m-i}(u_1^b)\}$. Arrange the elements in $A_1 \bigcup A_2$ as

$$\overrightarrow{A_1 \bigcup A_2} = u_1^a, g_1(u_1^a), \cdots, \prod_{i=1}^{m-1} g_{m-i}(u_1^a); u_1^b, g_1(u_1^b), \cdots, \prod_{i=1}^{m-1} g_{m-i}(u_1^b).$$

If $\widetilde{N(u_1)} \setminus (A_1 \bigcup A_2 \bigcup \alpha A_1 \bigcup \alpha A_2) = \emptyset$, then the arrangement of elements in $A_1 \bigcup A_2$ is $\overrightarrow{A_1 \bigcup A_2}$. Otherwise, $\widetilde{N(u_1)} \setminus (A_1 \bigcup A_2 \bigcup \alpha A_1 \bigcup \alpha A_2) \neq \emptyset$. We can choose another quadricell $u_1^c \in \widetilde{N(u_1)} \setminus (A_1 \bigcup A_2 \bigcup \alpha A_1 \bigcup \alpha A_2)$. Generally, If we have gotten the quadricell sets $A_1, A_2, \cdots, A_r, 1 \leq r \leq 2k$, and the arrangement of element in them is $\overrightarrow{A_1 \bigcup A_2 \bigcup \cdots \bigcup A_r}$, if $\widetilde{N(u_1)} \setminus (A_1 \bigcup A_2 \bigcup \cdots \bigcup A_r \bigcup \alpha A_1 \bigcup \alpha A_2 \bigcup \cdots \bigcup \alpha A_r) \neq \emptyset$, then we can choose an element $u_1^d \in \widetilde{N(u_1)} \setminus (A_1 \bigcup A_2 \bigcup \cdots \bigcup A_r \bigcup \alpha A_1 \bigcup \alpha A_2 \bigcup \cdots \bigcup \alpha A_r)$ and define the quadricell set

$$A_{r+1} = \{u_1^d, g_1(u_1^d), \cdots, \prod_{i=1}^{m-1} g_{m-i}(u_1^d)\}$$

$$\alpha A_{r+1} = \{\alpha u_1^d, \alpha g_1(u_1^d), \cdots, \alpha \prod_{i=1}^{m-1} g_{m-i}(u_1^d)\}$$

and the arrangement of elements in A_{r+1} is

$$\overrightarrow{A_{r+1}} = u_1^d, g_1(u_1^d), \cdots, \prod_{i=1}^{m-1} g_{m-i}(u_1^d).$$

Define the arrangement of elements in $\bigcup\limits_{j=1}^{r+1} A_j$ to be

$$\overrightarrow{\bigcup_{j=1}^{r+1} A_j} = \overrightarrow{\bigcup_{i=1}^{r} A_i}; \overrightarrow{A_{r+1}}.$$

Whence,

$$\widetilde{N(u_1)} = (\bigcup_{j=1}^{k} A_j) \bigcup (\alpha \bigcup_{j=1}^{k} A_j)$$

and A_k is obtained by the action of the stabler G_{u_1} on u_1^e. At the same time, the arrangement of elements in the subset $\bigcup\limits_{j=1}^{k} A_j$ of $\widetilde{N(u_1)}$ to be $\overrightarrow{\bigcup\limits_{j=1}^{k} A_j}$.

Define the conjugatcy permutation pair of the vertex u_1 to be

$$\varrho_{u_1} = (C)(\alpha C^{-1}\alpha),$$

where,

$$C = (u_1^a, u_1^b, \cdots, u_1^e; g_1(u_1^a), g_1(u_1^b), \cdots, g_1(u_1^e), \cdots, \prod_{i=1}^{m-1}(u_1^a), \prod_{i=1}^{m-1}(u_1^b), \cdots, \prod_{i=1}^{m-1}(u_1^e)).$$

For any vertex $u_i \in O_1, 1 \leq i \leq k$, assume that $h(u_1) = u_i$, where $h \in G$, then we define the conjugatcy permutation pair ϱ_{u_i} of the vertex u_i to be

$$\varrho_{u_i} = \varrho_{u_1}^h = (C^h)(\alpha C^{-1}\alpha^{-1}).$$

Since O_1 is an orbit of the action G on $V(\Gamma)$, then we have that

$$(\prod_{i=1}^{k} \varrho_{u_i})^G = \prod_{i=1}^{k} \varrho_{u_i}.$$

Similarly, we can define the conjugatcy permutation pairs $\varrho_{v_1}, \varrho_{v_2}, \cdots, \varrho_{v_l}, \cdots, \varrho_{w_1}, \varrho_{w_2}, \cdots, \varrho_{w_t}$ of vertices in the orbits $O_2, \cdots, O_s$. We also have that

$$(\prod_{i=1}^{l} \varrho_{v_i})^G = \prod_{i=1}^{l} \varrho_{v_i}.$$

$$\cdots\cdots\cdots\cdots\cdots\cdots\cdots$$

$$(\prod_{i=1}^{t} \varrho_{w_i})^G = \prod_{i=1}^{t} \varrho_{w_i}.$$

Now define the permutation

$$\mathcal{P} = (\prod_{i=1}^{k} \varrho_{u_i}) \times (\prod_{i=1}^{l} \varrho_{v_i}) \times \cdots \times (\prod_{i=1}^{t} \varrho_{w_i}).$$

Then since $O_1, O_2, \cdots, O_s$ are the orbits of $V(\Gamma)$ under the action of G, we get that

$$\begin{aligned}\mathcal{P}^G &= (\prod_{i=1}^{k} \varrho_{u_i})^G \times (\prod_{i=1}^{l} \varrho_{v_i})^G \times \cdots \times (\prod_{i=1}^{t} \varrho_{w_i})^G \\ &= (\prod_{i=1}^{k} \varrho_{u_i}) \times (\prod_{i=1}^{l} \varrho_{v_i}) \times \cdots \times (\prod_{i=1}^{t} \varrho_{w_i}) = \mathcal{P}.\end{aligned}$$

Whence, if we define the map $M = (\mathcal{X}_{\alpha,\beta}, \mathcal{P})$, then G is an automorphism of the map M. $\natural$

For the orientation-preserving automorphism, we have the following result.

Theorem 3.1.2 *Let Γ be a connected graph. If $G \preceq \mathrm{Aut}\Gamma$, then G is an orientation-preserving automorphism group of a map underlying the graph Γ iff for $\forall v \in V(\Gamma)$, the stabler $G_v \preceq < v >$ is a cyclic group.*

Proof According to the Lemma 3.1.1(i), we know the necessary. Notice the approach of construction the conjugatcy permutation pair in the proof of the Theorem 3.1.1. We know that G is also an orientation-preserving automorphism group of the map M. $\natural$

According to the Theorem 3.1.2, we can prove the Theorem 2.4.3 now.

The Proof of the Theorem 2.4.3

Since every subgroup of a cyclic group is also a cyclic group, we know that any cyclic orientation-preserving automorphism group of the graph Γ is an orientation-preserving automorphism group of a map underlying the graph Γ by the Theorem 3.1.2. Whence, we get that

$$o_{max}(M, g) \leq o_{max}(G, g). \qquad \natural$$

Corollary 3.1.1 *For any positive integer n, there exists a vertex transitive map M underlying a circultant such that Z_n is an orientation-preserving automorphism group of the map M.*

Remark 3.1.1 Gardiner et al proved in [20] that if add an additional condition , i.e, G is transitive on the vertices in Γ, then there is a regular map underlying the graph Γ.

§2. The automorphisms of a complete graph on surfaces

A map is called a *complete map* if its underlying graph is a complete graph. For a connected graph Γ, the notations $\mathcal{E}^O(\Gamma), \mathcal{E}^N(\Gamma)$ and $\mathcal{E}^L(\Gamma)$ denote the embeddings of Γ on the orientable surfaces, non-orientable surfaces and locally surfaces, respectively. For $\forall e = (u, v) \in E(\Gamma)$, its quadricell $Ke = \{e, \alpha e, \beta e, \alpha\beta e\}$ can be represented by $Ke = \{u^{v+}, u^{v-}, v^{u+}, v^{u-}\}$.

Let K_n be a complete graph of order n. Label its vertices by integers $1, 2, ..., n$. Then its edge set is $\{ij | 1 \leq i, j \leq n, i \neq j\ ij = ji\}$, and

$$\mathcal{X}_{\alpha,\beta}(K_n) = \{i^{j+} : 1 \leq i, j \leq n, i \neq j\} \bigcup \{i^{j-} : 1 \leq i, j \leq n, i \neq j\},$$

$$\alpha = \prod_{1 \leq i,j \leq n, i \neq j} (i^{j+}, i^{j-}),$$

$$\beta = \prod_{1 \leq i,j \leq n, i \neq j} (i^{j+}, i^{j+})(i^{j-}, i^{j-}).$$

We determine all the automorphisms of complete maps of order n and give they concrete representation in this section.

First, we need some useful lemmas for an automorphism of a map induced by an automorphism of its underlying graph.

Lemma 3.2.1 *Let Γ be a connected graph and $g \in \mathrm{Aut}\Gamma$. If there is a map $M \in \mathcal{E}^L(\Gamma)$ such that the induced action $g^* \in \mathrm{Aut}\mathrm{M}$, then for $\forall (u, v), (x, y) \in E(\Gamma)$,*

$$[l^g(u), l^g(v)] = [l^g(x), l^g(y)] = constant,$$

where, $l^g(w)$ denotes the length of the cycle containing the vertex w in the cycle decomposition of g.

Proof According to the Lemma 2.2.1, we know that the length of a quadricell u^{v+} or u^{v-} under the action g^* is $[l^g(u), l^g(v)]$. Since g^* is an automorphism of map, therefore, g^* is semi-regular. Whence, we get that

$$[l^g(u), l^g(v)] = [l^g(x), l^g(y)] = constant. \qquad \natural$$

Now we consider conditions for an induced automorphism of a map by an automorphism of graph to be an orientation-reversing automorphism of a map.

Lemma 3.2.2 *If $\xi\alpha$ is an automorphism of a map, then $\xi\alpha = \alpha\xi$.*

Proof Since $\xi\alpha$ is an automorphism of a map, we know that

$$(\xi\alpha)\alpha = \alpha(\xi\alpha).$$

That is, $\xi\alpha = \alpha\xi$. $\natural$

Lemma 3.2.3 *If ξ is an automorphism of map $M = (\mathcal{X}_{\alpha,\beta}, \mathcal{P})$, then $\xi\alpha$ is semi-regular on $\mathcal{X}_{\alpha,\beta}$ with order $o(\xi)$ if $o(\xi) \equiv 0(mod 2)$ and $2o(\xi)$ if $o(\xi) \equiv 1(mod 2)$.*

Proof Since ξ is an automorphism of map by the Lemma 3.2.2, we know that the cycle decomposition of ξ can be represented by

$$\xi = \prod_k (x_1, x_2, \cdots, x_k)(\alpha x_1, \alpha x_2, \cdots, \alpha x_k),$$

where, $\prod_k$ denotes the product of disjoint cycles with length $k = o(\xi)$.

Therefore, if $k \equiv 0(mod 2)$, we get that

$$\xi\alpha = \prod_k (x_1, \alpha x_2, x_3, \cdots, \alpha x_k)$$

and if $k \equiv 1(mod 2)$, we get that

$$\xi\alpha = \prod_{2k} (x_1, \alpha x_2, x_3, \cdots, x_k, \alpha x_1, x_2, \alpha x_3, \cdots, \alpha x_k).$$

Whence, ξ is semi-regular acting on $\mathcal{X}_{\alpha,\beta}$. $\natural$

Now we can prove the following result for orientation-reversing automorphisms of a map.

Lemma 3.2.4 *For a connected graph Γ, let $\mathcal{K}$ be all automorphisms in $Aut\Gamma$ whose extending action on $\mathcal{X}_{\alpha,\beta}$, $X = E(\Gamma)$, are automorphisms of maps underlying the graph Γ. Then for $\forall\xi \in \mathcal{K}$, $o(\xi^*) \geq 2$, $\xi^*\alpha \in \mathcal{K}$ if and only if $o(\xi^*) \equiv 0(mod 2)$.*

Proof Notice that by the Lemma 3.2.3, if ξ^* is an automorphism of map with underlying graph Γ, then $\xi^*\alpha$ is semi-regular acting on $\mathcal{X}_{\alpha,\beta}$.

Assume ξ^* is an automorphism of map $M = (\mathcal{X}_{\alpha,\beta}, \mathcal{P})$. Without loss of generality, we assume that

$$\mathcal{P} = C_1 C_2 \cdots C_k,$$

where,$C_i = (x_{i1}, x_{i2}, \cdots, x_{ij_i})$ is a cycle in the decomposition of $\xi|_{V(\Gamma)}$ and $x_{it} = \{(e^{i1}, e^{i2}, \cdots, e^{it_i})(\alpha e^{i1}, \alpha e^{it_i}, \cdots, \alpha e^{i2})\}$ and.

$$\xi|_{E(\Gamma)} = (e_{11}, e_{12}, \cdots, e_{s_1})(e_{21}, e_{22}, \cdots, e_{2s_2}) \cdots (e_{l1}, e_{l2}, \cdots, e_{ls_l}).$$

and

$$\xi^* = C(\alpha C^{-1} \alpha),$$

where, $C = (e_{11}, e_{12}, \cdots, e_{s_1})(e_{21}, e_{22}, \cdots, e_{2s_2}) \cdots (e_{l1}, e_{l2}, \cdots, e_{ls_l})$. Now since ξ^* is an automorphism of map, we get that $s_1 = s_2 = \cdots = s_l = o(\xi^*) = s$.

If $o(\xi^*) \equiv 0(mod 2)$, define a map $M^* = (\mathcal{X}_{\alpha,\beta}, \mathcal{P}^*)$, where,

$$\mathcal{P}^* = C_1^* C_2^* \cdots C_k^*,$$

where, $C_i^* = (x_{i1}^*, x_{i2}^*, \cdots, x_{ij_i}^*)$, $x_{it}^* = \{(e_{i1}^*, e_{i2}^*, \cdots, e_{it_i}^*)(\alpha e_{i1}^*, \alpha e_{it_i}^*, \cdots, e_{i2}^*)\}$ and $e_{ij}^* = e_{pq}$. Take $e_{ij}^* = e_{pq}$ if $q \equiv 1(mod 2)$ and $e_{ij}^* = \alpha e_{pq}$ if $q \equiv 0(mod 2)$. Then we get that $M^{\xi\alpha} = M$.

Now if $o(\xi^*) \equiv 1(mod 2)$, by the Lemma 3.2.3, $o(\xi^*\alpha) = 2o(\xi^*)$. Therefore, any chosen quadricells $(e^{i1}, e^{i2}, \cdots, e^{it_i})$ adjacent to the vertex x_{i1} for $i = 1, 2, \cdots, n$, where, $n = |\Gamma|$, the resultant map M is unstable under the action of $\xi\alpha$. Whence, $\xi\alpha$ is not an automorphism of one map with underlying graph Γ. $\natural$

Now we determine all automorphisms of a complete map underlying a graph K_n by applying the previous results. Recall that the automorphism group of the graph K_n is just the symmetry group of degree n, that is, $\mathrm{AutK}_n = S_n$.

Theorem 3.2.1 *All orientation-preserving automorphisms of non-orientable complete maps of order≥ 4 are extended actions of elements in*

$$\mathcal{E}_{[s^{\frac{n}{s}}]}, \quad \mathcal{E}_{[1, s^{\frac{n-1}{s}}]},$$

and all orientation-reversing automorphisms of non-orientable complete maps of order≥ 4 are extended actions of elements in

$$\alpha\mathcal{E}_{[(2s)^{\frac{n}{2s}}]}, \quad \alpha\mathcal{E}_{[(2s)^{\frac{4}{2s}}]}, \quad \alpha\mathcal{E}_{[1,1,2]},$$

where, $\mathcal{E}_\theta$ denotes the conjugatcy class containing element θ in the symmetry group S_n

Proof First, we prove that the induced permutation ξ^* on a complete map of order n by an element $\xi \in S_n$ is an cyclic order-preserving automorphism of non-orientable map, if, and only if,

$$\xi \in \mathcal{E}_{s^{\frac{n}{s}}} \bigcup \mathcal{E}_{[1,s^{\frac{n-1}{s}}]}$$

Assume the cycle index of ξ is $[1^{k_1}, 2^{k_2}, ..., n^{k_n}]$. If there exist two integers $k_i, k_j \neq 0$, and $i, j \geq 2, i \neq j$, then in the cycle decomposition of ξ , there are two cycles

$$(u_1, u_2, ..., u_i) \quad \text{and} \quad (v_1, v_2, ..., v_j).$$

Since

$$[l^\xi(u_1), l^\xi(u_2)] = i \quad \text{and} \quad [l^\xi(v_1), l^\xi(v_2)] = j$$

and $i \neq j$, we know that ξ^* is not an automorphism of embedding by the Lemma 2.5. Whence, the cycle index of ξ must be the form of $[1^k, s^l]$.

Now if $k \geq 2$, let $(u), (v)$ be two cycles of length 1 in the cycle decomposition of ξ. By the Lemma 2.5, we know that

$$[l^\xi(u), l^\xi(v)] = 1.$$

If there is a cycle $(w, ...)$ in the cycle decomposition of ξ whose length greater or equal to two, we get that

$$[l^\xi(u), l^\xi(w)] = [1, l^\xi(w)] = l^\xi(w).$$

According to the Lemma 3.2.1, we get that $l^\xi(w) = 1$, a contradiction. Therefore, the cycle index of ξ must be the forms of $[s^l]$ or $[1, s^l]$. Whence,$sl = n$ or $sl + 1 = n$. Calculation shows that $l = \frac{n}{s}$ or $l = \frac{n-1}{s}$. That is, the cycle index of ξ is one of the following three types $[1^n]$, $[1, s^{\frac{n-1}{s}}]$ and $[s^{\frac{n}{s}}]$ for some integer s .

Now we only need to prove that for each element ξ in $\mathcal{E}_{[1,s\frac{n-1}{s}]}$ and $\mathcal{E}_{[s\frac{n}{s}]}$, there exists an non-orientable complete map M of order n with the induced permutation ξ^* being its cyclic order-preserving automorphism of surface. The discussion are divided into two cases.

Case 1 $\xi \in \mathcal{E}_{[s\frac{n}{s}]}$

Assume the cycle decomposition of ξ being $\xi = (a, b, \cdots, c) \cdots (x, y, \cdots, z) \cdots (u, v, \cdots, w)$, where, the length of each cycle is k, and $1 \leq a, b, \cdots, c, x, y, \cdots, z, u, v, \cdots, w \leq n$. In this case, we can construct a non-orientable complete map $M_1 = (\mathcal{X}^1_{\alpha,\beta}, \mathcal{P}_1)$ as follows.

$$\mathcal{X}^1_{\alpha,\beta} = \{i^{j+} : 1 \leq i, j \leq n, i(j\} \bigcup \{i^{j-} : 1 \leq i, j \leq n, i \neq j\},$$

$$\mathcal{P}_1 = \prod_{x \in \{a,b,\cdots,c,\cdots,x,y,\cdots,z,u,v,\cdots,w\}} (C(x))(\alpha C(x)^{-1}\alpha),$$

where,

$$C(x) = (x^{a+}, \cdots, x^{x*}, \cdots, x^{u+}, x^{b+}, x^{y+}, \cdots, \cdots, x^{v+}, x^{c+}, \cdots, x^{z+}, \cdots, x^{w+}),$$

where x^{x*} denotes an empty position and

$$\alpha C(x)^{-1}\alpha = (x^{a-}, x^{w-}, \cdots, x^{z-}, \cdots, x^{c-}, x^{v-}, \cdots, x^{b-}, x^{u-}, \cdots, x^{y-}, \cdots).$$

It is clear that $M_1^{\xi^*} = M_1$. Therefore, ξ^* is an cyclic order-preserving automorphism of the map M_1.

Case 2 $\xi \in \mathcal{E}_{[1,s\frac{n-1}{s}]}$

We assume the cycle decomposition of ξ being

$$\xi = (a, b, ..., c)...(x, y, ..., z)...(u, v, ..., w)(t),$$

where, the length of each cycle is k beside the final cycle, and $1 \leq a, b...c, x, y..., z, u, v, ..., w, t \leq n$. In this case, we construct a non-orientable complete map $M_2 = (\mathcal{X}^2_{\alpha,\beta}, \mathcal{P}_2)$ as follows.

$$\mathcal{X}^2_{\alpha,\beta} = \{i^{j+} : 1 \leq i, j \leq n, i \neq j\} \bigcup \{i^{j-} : 1 \leq i, j \leq n, i \neq j\},$$

$$\mathcal{P}_2 = (A)(\alpha A^{-1}) \prod_{x \in \{a,b,\ldots,c,\ldots,x,y,\ldots z,u,v,\ldots,w\}} (C(x))(\alpha C(x)^{-1}\alpha),$$

where,

$$A = (t^{a+}, t^{x+}, \ldots t^{u+}, t^{b+}, t^{y+}, \ldots, t^{v+}, \ldots, t^{c+}, t^{z+}, \ldots, t^{w+})$$

and

$$\alpha A^{-1}\alpha = (t^{a-}, t^{w-}, \ldots t^{z-}, t^{c-}, t^{v-}, \ldots, t^{y-}, \ldots, t^{b-}, t^{u-}, \ldots, t^{x-})$$

and

$$C(x) = (x^{a+}, \ldots, x^{x*}, \ldots, x^{u+}, x^{b+}, \ldots, x^{y+}, \ldots, x^{v+}, \ldots, x^{c+}, \ldots, x^{z+}, \ldots, x^{w+})$$

and

$$\alpha C(x)^{-1}\alpha = (x^{a-}, x^{w-}, .., x^{z-}, \ldots, x^{c-}, \ldots, x^{v-}, \ldots, x^{y-}, \ldots, x^{b-}, x^{u-}, \ldots).$$

It is also clear that $M_2^{\xi^*} = M_2$. Therefore, ξ^* is an automorphism of a map M_2 .

Now we consider the case of orientation-reversing automorphism of a complete map. According to the Lemma 3.2.4, we know that an element $\xi\alpha$, where, $\xi \in S_n$, is an orientation-reversing automorphism of a complete map, only if,

$$\xi \in \mathcal{E}_{[k^{\frac{n_1}{k}}, (2k)^{\frac{n-n_1}{2k}}]}.$$

Our discussion is divided into two parts.

Case 3 $\quad n_1 = n$

Without loss of generality, we can assume the cycle decomposition of ξ has the following form in this case.

$$\xi = (1, 2, \cdots, k)(k+1, k+2, \cdots, 2k) \cdots (n-k+1, n-k+2, \cdots, n).$$

Subcase 3.1 $k \equiv 1(mod2)$ and $k > 1$

According to the Lemma 3.2.4, we know that $\xi^*\alpha$ is not an automorphism of map since $o(\xi^*) = k \equiv 1(mod2)$.

Subcase 3.2 $k \equiv 0(mod2)$

Construct a non-orientable map $M_3 = (\mathcal{X}^3_{\alpha,\beta}, \mathcal{P}_3)$, where $X^3 = E(K_n)$ and

$$\mathcal{P}_3 = \prod_{i\in\{1,2,\cdots,n\}} (C(i))(\alpha C(i)^{-1}\alpha),$$

where, if $i \equiv 1(mod2)$, then

$$C(i) = (i^{1+}, i^{k+1+}, \cdots, i^{n-k+1+}, i^{2+}, \cdots, i^{n-k+2+}, \cdots, i^{i*}, \cdots, i^{k+}, i^{2k+}, \cdots, i^{n+}),$$

$$\alpha C(i)^{-1}\alpha = (i^{1-}, i^{n-}, \cdots, i^{2k-}, i^{k-}, \cdots, i^{k+1-})$$

and if $i \equiv 0(mod2)$, then

$$C(i) = (i^{1-}, i^{k+1-}, \cdots, i^{n-k+1-}, i^{2-}, \cdots, i^{n-k+2-}, \cdots, i^{i*}, \cdots, i^{k-}, i^{2k-}, \cdots, i^{n-}),$$

$$\alpha C(i)^{-1}\alpha = (i^{1+}, i^{n+}, \cdots, i^{2k+}, i^{k+}, \cdots, i^{k+1+}).$$

Where, i^{i*} denotes the empty position, for example, $(2^1, 2^{2*}, 2^3, 2^4, 2^5) = (2^1, 2^3, 2^4, 2^5)$. It is clear that $\mathcal{P}_3^{\xi\alpha} = \mathcal{P}_3$, that is, $\xi\alpha$ is an automorphism of map M_3.

Case 4 $n_1 \neq n$

Without loss of generality, we can assume that

$$\begin{aligned}\xi &= (1, 2, \cdots, k)(k+1, k+2, \cdots, n_1)\cdots(n_1-k+1, n_1-k+2, \cdots, n_1)\\ &\times (n_1+1, n_1+2, \cdots, n_1+2k)(n_1+2k+1, \cdots, n_1+4k)\cdots(n-2k+1, \cdots, n)\end{aligned}$$

Subcase 4.1 $k \equiv 0(mod2)$

Consider the orbits of 1^{2+} and $n_1 + 2k + 1^{1+}$ under the action of $< \xi\alpha >$, we get that

$$|orb((1^{2+})^{<\xi\alpha>})| = k$$

and

$$|orb(((n_1 + 2k + 1)^{1+})^{<\xi\alpha>})| = 2k.$$

Contradicts to the Lemma 3.2.1.

Subcase 4.2 $k \equiv 1(mod 2)$

In this case, if $k \neq 1$, then $k \geq 3$. Similar to the discussion of the Subcase 3.1, we know that $\xi\alpha$ is not an automorphism of complete map. Whence, $k = 1$ and

$$\xi \in \mathcal{E}_{[1^{n_1}, 2^{n_2}]}.$$

Without loss of generality, assume that

$$\xi = (1)(2)\cdots(n_1)(n_1+1, n_1+2)(n_1+3, n_1+4)\cdots(n_1+n_2-1, n_1+n_2).$$

If $n_2 \geq 2$, and there exists a map $M = (\mathcal{X}_{\alpha,\beta}, \mathcal{P})$, assume the vertex v_1 in M being

$$v_1 = (1^{l_{12}+}, 1^{l_{13}+}, \cdots, 1^{l_{1n}+})(1^{l_{12}-}, 1^{l_{1n}-}, \cdots, 1^{l_{13}-})$$

where, $l_{1i} \in \{+2, -2, +3, -3, \cdots, +n, -n\}$ and $l_{1i} \neq l_{1j}$ if $i \neq j$.

Then we get that

$$(v_1)^{\xi\alpha} = (1^{l_{12}-}, 1^{l_{13}-}, \cdots, 1^{l_{1n}-})(1^{l_{12}+}, 1^{l_{1n}+}, \cdots, 1^{l_{13}+}) \neq v_1.$$

Whence, $\xi\alpha$ is not an automorphism of map M. A contradiction.

Therefore, $n_2 = 1$. Similarly, we can also get that $n_1 = 2$. Whence, $\xi = (1)(2)(34)$ and $n = 4$. We construct a stable non-orientable map M_4 under the action of $\xi\alpha$ as follows.

$$M_4 = (\mathcal{X}^4_{\alpha,\beta}, \mathcal{P}_4),$$

where,

$$\begin{aligned}\mathcal{P}_4 &= (1^{2+},1^{3+},1^{4+})(2^{1+},2^{3+},2^{4+})(3^{1+},3^{2+},3^{4+})(4^{1+},4^{2+},4^{3+})\\ &\times (1^{2-},1^{4-},1^{3-})(2^{1-},2^{4-},2^{3-})(3^{1-},3^{4-},3^{2-})(4^{1-},4^{3-},4^{2-}).\end{aligned}$$

Therefore, all orientation-preserving automorphisms of non-orientable complete maps are extended actions of elements in

$$\mathcal{E}_{[s^{\frac{n}{s}}]}, \quad \mathcal{E}_{[1,s^{\frac{n-1}{s}}]}$$

and all orientation-reversing automorphisms of non-orientable complete maps are extended actions of elements in

$$\alpha\mathcal{E}_{[(2s)^{\frac{n}{2s}}]}, \quad \alpha\mathcal{E}_{[(2s)^{\frac{4}{2s}}]} \quad \alpha\mathcal{E}_{[1,1,2]}.$$

This completes the proof. $\natural$

According to the Rotation Embedding Scheme for orientable embedding of a graph, First presented by Heffter in 1891 and formalized by Edmonds in [17], each orientable complete map is just the case of eliminating the sign + and - in our representation for complete map. Whence,we have the following result for an automorphism of orientable surfaces, which is similar to the Theorem 3.2.1.

Theorem 3.2.2 *All orientation-preserving automorphisms of orientable complete maps of order*≥ 4 *are extended actions of elements in*

$$\mathcal{E}_{[s^{\frac{n}{s}}]}, \quad \mathcal{E}_{[1,s^{\frac{n-1}{s}}]}$$

and all orientation-reversing automorphisms of orientable complete maps of order≥ 4 *are extended actions of elements in*

$$\alpha\mathcal{E}_{[(2s)^{\frac{n}{2s}}]}, \quad \alpha\mathcal{E}_{[(2s)^{\frac{4}{2s}}]}, \quad \alpha\mathcal{E}_{[1,1,2]},$$

where,$\mathcal{E}_\theta$ *denotes the conjugatcy class containing* θ *in* S_n.

Proof The proof is similar to that of the Theorem 3.2.1. For completion, we only need to construct orientable maps $M_i^O, i = 1,2,3,4$, to replace the non-orientable maps $M_i, i = 1,2,3,4$ in the proof of the Theorem 3.2.1.

In fact, for orientation-preserving case, we only need to take M_1^O, M_2^O to be the resultant maps eliminating the sign + and - in M_1, M_2 constructed in the proof of the Theorem 3.2.1.

For the orientation-reversing case, we take $M_3^O = (E(K_n)_{\alpha,\beta}, \mathcal{P}_3^O)$ with

$$\mathcal{P}_3 = \prod_{i\in\{1,2,\cdots,n\}} (C(i)),$$

where, if $i \equiv 1(mod 2)$, then

$$C(i) = (i^1, i^{k+1}, \cdots, i^{n-k+1}, i^2, \cdots, i^{n-k+2}, \cdots, i^{i*}, \cdots, i^k, i^{2k}, \cdots, i^n),$$

and if $i \equiv 0(mod 2)$, then

$$C(i) = (i^1, i^{k+1}, \cdots, i^{n-k+1}, i^2, \cdots, i^{n-k+2}, \cdots, i^{i*}, \cdots, i^k, i^{2k}, \cdots, i^n)^{-1},$$

where i^{i*} denotes the empty position and $M_4^O = (E(K_4)_{\alpha,\beta}, \mathcal{P}_4)$ with

$$\mathcal{P}_4 = (1^2, 1^3, 1^4)(2^1, 2^3, 2^4)(3^1, 3^4, 3^2)(4^1, 4^2, 4^3).$$

It can be shown that $(M_i^O)^{\xi^*\alpha} = M_i^O$ for $i = 1, 2, 3$ and 4. $\natural$

§3. The automorphisms of a semi-regular graph on surfaces

A graph is called a *semi-regular graph* if it is simple and its automorphism group action on its ordered pair of adjacent vertices is fixed-free, which is considered in [43], [50] for enumeration its non-equivalent embeddings on surfaces. A map underlying a semi-regular graph is called a *semi-regular map*. We determine all automorphisms of maps underlying a semi-regular graph in this section.

Comparing with the Theorem 3.1.2, we get a necessary and sufficient condition for an automorphism of a graph being that of a map.

Theorem 3.3.1 *For a connected graph* Γ*, an automorphism* $\xi \in \mathrm{Aut}\Gamma$ *is an orientation-preserving automorphism of a non-orientable map underlying the graph* Γ *iff* ξ *is semi-regular acting on its ordered pairs of adjacent vertices.*

Proof According to the Lemma 2.2.1, if $\xi \in \mathrm{Aut}\Gamma$ is an orientation-preserving automorphism of a map M underlying graph Γ, then ξ is semi-regular acting on its ordered pairs of adjacent vertices.

Now assume that $\xi \in \mathrm{Aut}\Gamma$ is semi-regular acting on its ordered pairs of adjacent vertices. Denote by $\xi|_{V(\Gamma)}$, $\xi|_{E(\Gamma)_\beta}$ the action of ξ on $V(\Gamma)$ and on its ordered pairs of adjacent vertices,respectively. By the given condition, we can assume that

$$\xi|_{V(\Gamma)} = (a, b, \cdots, c) \cdots (g, h, \cdots, k) \cdots (x, y, \cdots, z)$$

and

$$\xi|_{E(\Gamma)_\beta} = C_1 \cdots C_i \cdots C_m,$$

where, $s_a|C(a)| = \cdots = s_g|C(g)| = \cdots = s_x|C(x)|$, and C(g) denotes the cycle containing g in $\xi|_{V(\Gamma)}$ and

$C_1 = (a^1, b^1, \cdots, c^1, a^2, b^2, \cdots, c^2, \cdots, a^{s_a}, b^{s_a}, \cdots, c^{s_a})$,

$\cdots\cdots\cdots\cdots\cdots\cdots\cdots\cdots\cdots\cdots\cdots\cdots\cdots\cdots\cdots$,

$C_i = (g^1, h^1, \cdots, k^1, g^2, k^2, \cdots, k^2, \cdots, g^{s_g}, h^{s_g}, \cdots, k^{s_g})$,

$\cdots\cdots\cdots\cdots\cdots\cdots\cdots\cdots\cdots\cdots\cdots\cdots\cdots\cdots\cdots$,

$C_m = (x^1, y^1, \cdots, z^1, \cdots, x^2, y^2, \cdots, z^2, \cdots, x^{s_x}, y^{s_x}, \cdots, z^{s_x})$.

Now for $\forall \xi, \xi \in \mathrm{Aut}\Gamma$. We construct a stable map $M = (\mathcal{X}_{\alpha,\beta}, \mathcal{P})$ under the action of ξ as follows.

$$X = E(\Gamma)$$

and

$$\mathcal{P} = \prod_{g \in T_\xi^V} \prod_{x \in C(g)} (C_x)(\alpha C_x^{-1}).$$

Assume that $u = \xi^f(g)$, and

$$N_\Gamma(g) = \{g^{z_1}, g^{z_2}, \cdots, g^{z_l}\}.$$

Obviously, all degrees of vertices in $C(g)$ are same. Notices that $\xi|_{N_\Gamma(g)}$ is circular acting on $N_\Gamma(g)$ by the Theorem 3.1.2. Whence, it is semi-regular acting on $N_\Gamma(g)$. Without loss of generality, we can assume that

$$\xi|_{N_\Gamma(g)} = (g^{z_1}, g^{z_2}, \cdots, g^{z_s})(g^{z_{s+1}}, g^{z_{s+2}}, \cdots, g^{z_{2s}}) \cdots (g^{z_{(k-1)s+1}}, g^{z_{(k-1)s+2}}, \cdots, g^{z_{ks}}),$$

where, $l = ks$. Choose

$$C_g = (g^{z_1+}, g^{z_{s+1}+}, \cdots, g^{z_{(k-1)s+1}+}, g^{z_2+}, g^{z_{s+2}+}, \cdots, g^{z_s+}, g^{z_{2s}}, \cdots, g^{z_{ks}+}).$$

Then,

$$C_x = (x^{z_1+}, x^{z_{s+1}+}, \cdots, x^{z_{(k-1)s+1}+}, x^{z_2+}, x^{z_{s+2}+}, \cdots, x^{z_s+}, x^{z_{2s}}, \cdots, x^{z_{ks}+}),$$

where,

$$x^{z_i+} = \xi^f(g^{z_i+}),$$

for $i = 1, 2, \cdots, ks$. and

$$\alpha C_x^{-1} = (\alpha x^{z_1+}, \alpha x^{z_{s+1}+}, \cdots, \alpha x^{z_{(k-1)s+1}+}, \alpha x^{z_s+}, \alpha x^{z_{2s}}, \cdots, \alpha x^{z_{ks}+}).$$

Immediately, we get that $M^\xi = \xi M \xi^{-1} = M$ by this construction. Whence, ξ is an orientation-preserving automorphism of the map M. $\natural$

By the Rotation Embedding Scheme, eliminating α on each quadricell in Tutte's representation of an embedding induces an orientable embedding with the same underlying graph. Since an automorphism of an embedding is commutative with α and β, we get the following result for the orientable-preserving automorphisms of the orientable maps underlying a semi-regular graph.

Theorem 3.3.2 *If* Γ *is a connected semi-regular graph, then for* $\forall \xi \in \mathrm{Aut}\Gamma$, ξ *is an orientation-preserving automorphism of orientable maps underlying the graph* Γ.

According to the Theorem 3.3.1 and 3.3.2, if Γ is semi-regular, i.e., each automorphism acting on the ordered pairs of adjacent vertices in Γ is fixed-free, then

every automorphism of the graph Γ is an orientation-preserving automorphism of orientable maps and non-orientable maps underlying the graph Γ. We restated this result as the following.

Theorem 3.3.3 *If Γ is a connected semi-regular graph, then for $\forall\xi \in \mathrm{Aut}\Gamma$, ξ is an orientation-preserving automorphism of orientable maps and non-orientable maps underlying the graph Γ.*

Notice that if ς^* is an orientation-reversing automorphisms of a map, then $\varsigma^*\alpha$ is an orientation-preserving automorphism of the same map. By the Lemma 3.2.4, if τ is an automorphism of maps underlying a graph Γ, then $\tau\alpha$ is an automorphism of maps underlying this graph if and only if $\tau \equiv 0(mod2)$. Whence, we have the following result for the automorphisms of maps underlying a semi-regular graph

Theorem 3.3.4 *Let Γ be a semi-regular graph. Then all the automorphisms of orientable maps underlying the graph Γ are*

$$g|^{\mathcal{X}_{\alpha,\beta}} \text{ and } \alpha h|^{\mathcal{X}_{\alpha,\beta}}, g, h \in \mathrm{Aut}\Gamma \text{ with } h \equiv 0(mod2).$$

and all the automorphisms of non-orientable maps underlying the graph Γ are also

$$g|^{\mathcal{X}_{\alpha,\beta}} \text{ and } \alpha h|^{\mathcal{X}_{\alpha,\beta}}, g, h \in \mathrm{Aut}\Gamma \text{ with } h \equiv 0(mod2).$$

Theorem 3.3.4 will be used in the Chapter 4 for the enumeration of unrooted maps on surfaces underlying a semi-regular graph.

§4. The automorphisms of one face maps

There is a well-know result for the automorphisms of a map and its dual in topological graph theory, i.e., the automorphism group of a map is same as its dual. Therefore, for determining the automorphisms of one face maps, we can determine them by the automorphisms of a bouquet B_n on surfaces.

A map underlying a graph $B_n, n \geq 1$ has the form $\mathcal{B}_n = (\mathcal{X}_{\alpha,\beta}, \mathcal{P}_n)$ with $X = E(B_n) = \{e_1, e_2, \cdots, e_n\}$ and

$$\mathcal{P}_n = (x_1, x_2, \cdots, x_{2n})(\alpha x_1, \alpha x_{2n}, \cdots, x_2)$$

where, $x_i \in X, \beta X$ or $\alpha\beta X$ and satisfying the condition (Ci) and (Cii) in the Section 2.2 of Chapter 1. For a given bouquet B_n with n edges, its semi-arc automorphism group is

$$Aut_{\frac{1}{2}} B_n = S_n[S_2].$$

Form group theory, we know that each element in $S_n[S_2]$ can be represented by $(g; h_1, h_2, \cdots, h_n)$ with $g \in S_n$ and $h_i \in S_2 = \{1, \alpha\beta\}$ for $i = 1, 2, \cdots, n$. The action of $(g; h_1, h_2, \cdots, h_n)$ on a map $\mathcal{B}_n$ underlying a graph B_n by the following rule:

if $x \in \{e_i, \alpha e_i, \beta e_i, \alpha\beta e_i\}$, *then* $(g; h_1, h_2, \cdots, h_n)(x) = g(h_i(x))$.

For example, if $h_1 = \alpha\beta$, then,$(g; h_1, h_2, \cdots, h_n)(e_1) = \alpha\beta g(e_1)$, $(g; h_1, h_2, \cdots, h_n)(\alpha e_1) = \beta g(e_1)$, $(g; h_1, h_2, \cdots, h_n)(\beta e_1) = \alpha g(e_1)$ and $(g; h_1, h_2, \cdots, h_n)(\alpha\beta e_1) = g(e_1)$.

The following result for automorphisms of a map underlying a graph B_n is obvious.

Lemma 3.4.1 *Let* $(g; h_1, h_2, \cdots, h_n)$ *be an automorphism of a map* $\mathcal{B}_n$ *underlying a graph* B_n. *Then*

$$(g; h_1, h_2, \cdots, h_n) = (x_1, x_2, ..., x_{2n})^k,$$

and if $(g; h_1, h_2, \cdots, h_n)\alpha$ *is an automorphism of a map* $\mathcal{B}_n$, *then*

$$(g; h_1, h_2, \cdots, h_n)\alpha = (x_1, x_2, \cdots, x_{2n})^k$$

for some integer $k, 1 \leq k \leq n$. *Where,* $x_i \in \{e_1, e_2, \cdots, e_n\}, i = 1, 2, \cdots, 2n$ *and* $x_i \neq x_j$ *if* $i \neq j$.

Analyzing the structure of elements in the group $S_n[S_2]$, we get the automorphisms of maps underlying a graph B_n by the Theorem 3.3.1 and 3.3.2 as follows.

Theorem 3.4.1 *Let* B_n *be a bouquet with* n *edges* $1, 2, \cdots, n$. *Then the automorphisms* $(g; h_1, h_2, \cdots, h_n)$ *of orientable maps underlying a* $B_n, n \geq 1$, *are respective*

$(O1)$ $g \in \mathcal{E}_{[k^{\frac{n}{k}}]}$, $h_i = 1, i = 1, 2, \cdots, n$;

$(O2)$ $g \in \mathcal{E}_{[k^{\frac{n}{k}}]}$ *and if* $g = \prod_{i=1}^{n/k}(i_1, i_2, \cdots i_k)$, *where* $i_j \in \{1, 2, \cdots, n\}, n/k \equiv 0(mod 2)$, *then* $h_{i_1} = (1, \alpha\beta), i = 1, 2, \cdots, \frac{n}{k}$ *and* $h_{i_j} = 1$ *for* $j \geq 2$;

$(O3)$ $g \in \mathcal{E}_{[k^{2s},(2k)^{\frac{n-2ks}{2k}}]}$ *and if* $g = \prod_{i=1}^{2s}(i_1, i_2, \cdots i_k) \prod_{j=1}^{(n-2ks)/2k}(e_{j_1}, e_{j_2}, \cdots, e_{j_{2k}})$, *where* $i_j, e_{j_t} \in \{1, 2, \cdots, n\}$, *then* $h_{i_1} = (1, \alpha\beta)$, $i = 1, 2, \cdots, s, h_{i_l} = 1$ *for* $l \geq 2$ *and* $h_{j_t} = 1$ *for* $t = 1, 2, \cdots, 2k$

and the automorphisms $(g; h_1, h_2, \cdots, h_n)$ *of non-orientable maps underlying a* $B_n, n \geq 1$, *are respective*

$(N1)$ $g \in \mathcal{E}_{[k^{\frac{n}{k}}]}$, $h_i = 1, i = 1, 2, \cdots, n$;

$(N2)$ $g \in \mathcal{E}_{[k^{\frac{n}{k}}]}$ *and if* $g = \prod_{i=1}^{n/k}(i_1, i_2, \cdots i_k)$, *where* $i_j \in \{1, 2, \cdots, n\}, n/k \equiv 0(mod 2)$, *then* $h_{i_1} = (1, \alpha\beta), (1, \beta)$ *with at least one* $h_{i_{01}}(1, \beta), i = 1, 2, \cdots, \frac{n}{k}$ *and* $h_{i_j} = 1$ *for* $j \geq 2$;

$(N3)$ $g \in \mathcal{E}_{[k^{2s},(2k)^{\frac{n-2ks}{2k}}]}$ *and if* $g = \prod_{i=1}^{2s}(i_1, i_2, \cdots i_k) \prod_{j=1}^{(n-2ks)/2k}(e_{j_1}, e_{j_2}, \cdots, e_{j_{2k}})$, *where* $i_j, e_{j_t} \in \{1, 2, \cdots, n\}$, *then* $h_{i_1} = (1, \alpha\beta), (1, \beta)$ *with at least one* $h_{i_{01}} = (1, \beta), i = 1, 2, \cdots, s, h_{i_l} = 1$ *for* $l \geq 2$ *and* $h_{j_t} = 1$ *for* $t = 1, 2, \cdots, 2k$,

where, $\mathcal{E}_\theta$ *denotes the conjugacy class in the symmetry group* S_n *containing the element* θ.

Proof By the structure of the group $S_n[S_2]$, it is clear that the elements in the cases $(i), (ii)$ and (iii) are its all semi-regular elements. We only need to construct an orientable or non-orientable map $\mathcal{B}_n = (\mathcal{X}_{\alpha,\beta}, \mathcal{P}_n)$ underlying B_n stable under the action of an element in each case.

(i) $g = \prod_{i=1}^{n/k}(i_1, i_2, \cdots i_k)$ and $h_i = 1, i = 1, 2, \cdots, n$, where $i_j \in \{1, 2, \cdots, n\}$.

Choose

$$\mathcal{X}^1_{\alpha,\beta} = \bigcup_{i=1}^{n/k} K\{i_1, i_2, \cdots, i_k\},$$

where $K = \{1, \alpha, \beta, \alpha\beta\}$ and

$$\mathcal{P}^1_n = C_1(\alpha C_1^{-1}\alpha^{-1})$$

with

$$C_1 = (\quad 1_1, \quad 2_1, \cdots, (\frac{n}{k})_1, \alpha\beta 1_1, \alpha\beta 2_1, \cdots, \alpha\beta(\frac{n}{k})_1, 1_2, 2_2, \cdots, (\frac{n}{k})_2,$$
$$\alpha\beta 1_2, \quad \alpha\beta 2_2, \cdots, \alpha\beta(\frac{n}{k})_2, \cdots, 1_k, 2_k, \cdots, (\frac{n}{k})_k, \alpha\beta 1_k, \alpha\beta 1_k, \cdots, \alpha\beta(\frac{n}{k})_k).$$

Then the map $\mathcal{B}_n^1 = (\mathcal{X}_{\alpha,\beta}^1, \mathcal{P}_n^1)$ is an orientable map underlying the graph B_n and stable under the action of $(g; h_1, h_2, \cdots, h_n)$.

For the non-orientable case, we can chose

$$C_1 = (\quad 1_1, \quad 2_1, \cdots, (\frac{n}{k})_1, \beta 1_1, \beta 2_1, \cdots, \beta(\frac{n}{k})_1, 1_2, 2_2, \cdots, (\frac{n}{k})_2,$$
$$\beta 1_2, \quad \beta 2_2, \cdots, \beta(\frac{n}{k})_2, \cdots, 1_k, 2_k, \cdots, (\frac{n}{k})_k, \beta 1_k, \beta 1_k, \cdots, \beta(\frac{n}{k})_k).$$

Then the map $\mathcal{B}_n^1 = (\mathcal{X}_{\alpha,\beta}^1, \mathcal{P}_n^1)$ is a non-orientable map underlying the graph B_n and stable under the action of $(g; h_1, h_2, \cdots, h_n)$.

(ii) $g = \prod_{i=1}^{n/k}(i_1, i_2, \cdots i_k)$, $h_i = (1, \beta)$ *or* $(1, \alpha\beta), i = 1, 2, \cdots, n$, $\frac{n}{k} \equiv 0(mod 2)$, where $i_j \in \{1, 2, \cdots, n\}$.

If $h_{i_1} = (1, \alpha\beta)$ for $i = 1, 2, \cdots, \frac{n}{k}$ and $h_{i_t} = 1$ for $t \geq 2$. Then

$$(g; h_1, h_2, \cdots, h_n) = \prod_{i=1}^{n/k}(i_1, \alpha\beta i_2, \cdots \alpha\beta i_k, \alpha\beta i_1, i_2, \cdots, i_k).$$

Similar to the case (i), we take $\mathcal{X}_{\alpha,\beta}^2 = \mathcal{X}_{\alpha,\beta}^1$ and

$$\mathcal{P}_n^2 = C_2(\alpha C_2^{-1}\alpha^{-1})$$

with

$$C_2 = (\quad 1_1, \quad 2_1, \cdots, (\frac{n}{k})_1, \alpha\beta 1_2, \alpha\beta 2_2, \cdots, \alpha\beta(\frac{n}{k})_2, \alpha\beta 1_k, \alpha\beta 2_k,$$
$$\cdots \quad , \alpha\beta(\frac{n}{k})_k, \alpha\beta 1_1, \alpha\beta 2_1, \cdots, \alpha\beta(\frac{n}{k})_1, 1_2, 2_2, \cdots, (\frac{n}{k})_2, \cdots, 1_k, 2_k, \cdots, (\frac{n}{k})_k).$$

Then the map $\mathcal{B}_n^2 = (\mathcal{X}_{\alpha,\beta}^2, \mathcal{P}_n^2)$ is an orientable map underlying the graph B_n and stable under the action of $(g; h_1, h_2, \cdots, h_n)$. For the non-orientable case, the construction is similar. It only need to replace each element $\alpha\beta i_j$ by βi_j in the construction of the orientable case if $h_{i_j} = (1, \beta)$.

(iii) $g = \prod_{i=1}^{2s}(i_1, i_2, \cdots i_k) \prod_{j=1}^{(n-2ks)/2k}(e_{j_1}, e_{j_2}, \cdots, e_{j_{2k}})$ and $h_{i_1} = (1, \alpha\beta)$, $i = 1, 2, \cdots, s, h_{i_l} = 1$ *for* $l \geq 2$ *and* $h_{j_t} = 1$ *for* $t = 1, 2, \cdots, 2k$

In this case, we know that

$$(g; h_1, h_2, \cdots, h_n) = \prod_{i=1}^{s}(i_1, \alpha\beta i_2, \cdots \alpha\beta i_k, \alpha\beta i_1, i_2, \cdots, i_k) \prod_{j=1}^{(n-2ks)/2k}(e_{j_1}, e_{j_2}, \cdots, e_{j_{2k}}).$$

Denote by p the number $(n-2ks)/2k$. We construct an orientable map $\mathcal{B}_n^3 = (\mathcal{X}_{\alpha,\beta}^3, \mathcal{P}_n^3)$ underlying B_n stable under the action of $(g; h_1, h_2, \cdots, h_n)$ as follows.

Take $\mathcal{X}_{\alpha,\beta}^3 = \mathcal{X}_{\alpha,\beta}^1$ and

$$\mathcal{P}_n^3 = C_3(\alpha C_3^{-1}\alpha^{-1})$$

with

$$\begin{aligned} C_3 = (\quad & 1_1 \quad , 2_1, \cdots, s_1, e_{1_1}, e_{2_1}, \cdots, e_{p_1}, \alpha\beta 1_2, \alpha\beta 2_2, \cdots, \alpha\beta s_2, \\ & e_{1_2}, \quad e_{2_2}, \cdots, e_{p_2}, \cdots, \alpha\beta 1_k, \alpha\beta 2_k, \cdots, \alpha\beta s_k, e_{1_k}, e_{2_k}, \cdots, \\ & e_{p_k}, \quad \alpha\beta 1_1, \alpha\beta 2_1, \cdots, \alpha\beta s_1, e_{1_{k+1}}, e_{2_{k+1}}, \cdots, e_{p_{k+1}}, 1_2, 2_2, \cdots, \\ & s_2, \quad e_{1_{k+2}}, e_{2_{k+2}}, \cdots, e_{p_{k+2}}, \cdots, 1_k, 2_k, \cdots, s_k, e_{1_{2k}}, e_{2_{2k}}, \cdots, e_{p_{2k}}). \end{aligned}$$

Then the map $\mathcal{B}_n^3 = (\mathcal{X}_{\alpha,\beta}^3, \mathcal{P}_n^3)$ is an orientable map underlying the graph B_n and stable under the action of $(g; h_1, h_2, \cdots, h_n)$.

Similarly, replacing each element $\alpha\beta i_j$ by βi_j in the construction of the orientable case if $h_{i_j} = (1, \beta)$, a non-orientable map underlying the graph B_n and stable under the action of $(g; h_1, h_2, \cdots, h_n)$ can be also constructed. This completes the proof. $\natural$

We use the Lemma 3.4.1 for the enumeration of unrooted one face maps on surfaces in the next chapter.

Chapter 4 Application to the Enumeration of Unrooted Maps and s-manifolds

All the results gotten in the Chapter 3 is more useful for the enumeration of unrooted maps on surfaces underlying a graph. According to the theory in Chapter 1, the enumeration of unrooted maps on surfaces underlying a graph can be carried out by the following programming:

STEP 1. Determine all automorphisms of maps underlying a graph;

STEP 2. Calculate the the fixing set $Fix(\varsigma)$ for each automorphism ς of a map;

STEP 3. Enumerate the unrooted maps on surfaces underlying a graph by Corollary 1.3.1.

The advantage of this approach is its independence of the orientability, which enables us to enumerate orientable or non-orientable maps on surafces. We present the enumeration results by this programming in this chapter.

§1. The enumeration of unrooted complete maps on surfaces

We first consider a permutation and its stabilizer . A permutation with the following form $(x_1, x_2, ..., x_n)(\alpha x_n, \alpha x_2, ..., \alpha x_1)$ is called a *permutation pair*. The following result is obvious.

Lemma 4.1.1 *Let g be a permutation on the set $\Omega = \{x_1, x_2, ..., x_n\}$ such that $g\alpha = \alpha g$. If*

$$g(x_1, x_2, ..., x_n)(\alpha x_n, \alpha x_{n-1}, ..., \alpha x_1)g^{-1} = (x_1, x_2, ..., x_n)(\alpha x_n, \alpha x_{n-1}, ..., \alpha x_1),$$

then

$$g = (x_1, x_2, ..., x_n)^k$$

and if

$$g\alpha(x_1, x_2, ..., x_n)(\alpha x_n, \alpha x_{n-1}, ..., \alpha x_1)(g\alpha)^{-1} = (x_1, x_2, ..., x_n)(\alpha x_n, \alpha x_{n-1}, ..., \alpha x_1),$$

then

$$g\alpha = (\alpha x_n, \alpha x_{n-1}, ..., \alpha x_1)^k$$

for some integer $k, 1 \leq k \leq n$.

Lemma 4.1.2 *For each permutation $g, g \in \mathcal{E}_{[k\frac{n}{k}]}$ satisfying $g\alpha = \alpha g$ on the set $\Omega = \{x_1, x_2, ..., x_n\}$, the number of stable permutation pairs in Ω under the action of g or $g\alpha$ is*

$$\frac{2\phi(k)(n-1)!}{|\mathcal{E}_{[k\frac{n}{k}]}|},$$

where $\phi(k)$ denotes the Euler function.

Proof Denote the number of stable pair permutations under the action of g or $g\alpha$ by $n(g)$ and $\mathcal{C}$ the set of pair permutations. Define the set $A = \{(g, C)|g \in \mathcal{E}_{[k\frac{n}{k}]}, C \in \mathcal{C} \quad and \quad C^g = C \ or \ \ C^{g\alpha} = C\}$. Clearly, for $\forall g_1, g_2 \in \mathcal{E}_{[k\frac{n}{k}]}$, we have $n(g_1) = n(g_2)$. Whence, we get that

$$|A| = |\mathcal{E}_{[k\frac{n}{k}]}|n(g). \qquad (4.1.1)$$

On the other hand, by the Lemma 4.1.1, for any permutation pair $C = (x_1, x_2, ..., x_n)$ $(\alpha x_n, \alpha x_{n-1}, ..., \alpha x_1)$, since C is stable under the action of g, there must be $g = (x_1, x_2, ..., x_n)^l$ or $g\alpha = (\alpha x_n, \alpha x_{n-1}, ..., \alpha x_1)^l$, where $l = s\frac{n}{k}, 1 \leq s \leq k$ and $(s, k) = 1$. Therefore, there are $2\phi(k)$ permutations in $\mathcal{E}_{[k\frac{n}{k}]}$ acting on it stable. Whence, we also have

$$|A| = 2\phi(k)|\mathcal{C}|. \qquad (4.1.2)$$

Combining (4.1.1) with (4.1.2), we get that

$$n(g) = \frac{2\phi(k)|\mathcal{C}|}{|\mathcal{E}_{[k\frac{n}{k}]}|} = \frac{2\phi(k)(n-1)!}{|\mathcal{E}_{[k\frac{n}{k}]}|}. \qquad \natural$$

Now we can enumerate the unrooted complete maps on surfaces.

Theorem 4.1.1 *The number $n^L(K_n)$ of complete maps of order $n \geq 5$ on surfaces is*

$$n^L(K_n) = \frac{1}{2}(\sum_{k|n} + \sum_{k|n, k\equiv 0(mod2)})\frac{2^{\alpha(n,k)}(n-2)!^{\frac{n}{k}}}{k^{\frac{n}{k}}(\frac{n}{k})!} + \sum_{k|(n-1), k\neq 1}\frac{\phi(k)2^{\beta(n,k)}(n-2)!^{\frac{n-1}{k}}}{n-1},$$

where,

$$\alpha(n,k) = \begin{cases} \frac{n(n-3)}{2k}, & \text{if} \quad k \equiv 1(mod2); \\ \frac{n(n-2)}{2k}, & \text{if} \quad k \equiv 0(mod2), \end{cases}$$

and

$$\beta(n,k) = \begin{cases} \frac{(n-1)(n-2)}{2k}, & \text{if} \quad k \equiv 1(mod2); \\ \frac{(n-1)(n-3)}{2k}, & \text{if} \quad k \equiv 0(mod2). \end{cases}$$

and $n^L(K_4) = 11$.

Proof According to (1.3.3) in the Corollary 1.3.1 and the Theorem 3.2.1 for $n \geq 5$, we know that

$$\begin{aligned} n^L(K_n) &= \frac{1}{2|\mathrm{AutK}_n|} \times (\sum_{g_1 \in \mathcal{E}_{[k\frac{n}{k}]}} |\Phi(g_1)| + \sum_{g_2 \in \mathcal{E}_{[(2s)\frac{n}{2s}]}} |\Phi(g_2\alpha)| \\ &+ \sum_{h \in \mathcal{E}_{[1,k\frac{n-1}{k}]}} |\Phi(h)|) \\ &= \frac{1}{2n!} \times (\sum_{k|n} |\mathcal{E}_{[k\frac{n}{k}]}||\Phi(g_1)| + \sum_{l|n, l\equiv 0(mod2)} |\mathcal{E}_{[l\frac{n}{l}]}||\Phi(g_2\alpha)| \\ &+ \sum_{l|(n-1)} |\mathcal{E}_{[1,l\frac{n-1}{l}]}||\Phi(h)|), \end{aligned}$$

where, $g_1 \in \mathcal{E}_{[k\frac{n}{k}]}, g_2 \in \mathcal{E}_{[l\frac{n}{l}]}$ and $h \in \mathcal{E}_{[1,k\frac{n-1}{k}]}$ are three chosen elements.

Without loss of generality, we assume that an element $g, g \in \mathcal{E}_{[k\frac{n}{k}]}$ has the following cycle decomposition.

$$g = (1, 2, ..., k)(k+1, k+2, ..., 2k)...((\frac{n}{k}-1)k+1, (\frac{n}{k}-1)k+2, ..., n)$$

and

$$\mathcal{P} = \prod_1 \times \prod_2,$$

where,

$$\prod_1 = (1^{i_{21}}, 1^{i_{31}}, ..., 1^{i_{n1}})(2^{i_{12}}, 2^{i_{32}}, ..., 2^{i_{n2}})...(n^{i_{1n}}, n^{i_{2n}}, ..., n^{i_{(n-1)n}}),$$

and

$$\prod_2 = \alpha(\prod_1{}^{-1})\alpha^{-1},$$

being a complete map which is stable under the action of g, where $s_{ij} \in \{k+, k-|k = 1, 2, ...n\}$.

Notice that the quadricells adjacent to the vertex "1" can make $2^{n-2}(n-2)!$different pair permutations and for each chosen pair permutation, the pair permutations adjacent to the vertices $2, 3, ..., k$ are uniquely determined since $\mathcal{P}$ is stable under the action of g.

Similarly, for each given pair permutation adjacent to the vertex $k+1, 2k+1, ..., (\frac{n}{k}-1)k+1$, the pair permutations adjacent to $k+2, k+3, ..., 2k$ and $2k+2, 2k+3, ..., 3k$ and,...,and $(\frac{n}{k}-1)k+2, (\frac{n}{k}-1)k+3, ...n$ are also uniquely determined because $\mathcal{P}$ is stable under the action of g.

Now for an orientable embedding M_1 of K_n, all the induced embeddings by exchanging two sides of some edges and retaining the others unchanged in M_1 are the same as M_1 by the definition of maps. Whence, the number of different stable embeddings under the action of g gotten by exchanging x and αx in M_1 for $x \in U, U \subset \mathcal{X}_\beta$, where $\mathcal{X}_\beta = \bigcup_{x \in E(K_n)} \{x, \beta x\}$, is $2^{g(\varepsilon)-\frac{n}{k}}$, where $g(\varepsilon)$ is the number of orbits of $E(K_n)$ under the action of g and we substract $\frac{n}{k}$ because we can chosen $1^{2+}, k+1^{1+}, 2k+1^{1+}, \cdots, n-k+1^{1+}$ first in our enumeration.

Notice that the length of each orbit under the action of g is k for $\forall x \in E(K_n)$ if k is odd and is $\frac{k}{2}$ for $x = i^{i+\frac{k}{2}}, i = 1, k+1, \cdots, n-k+1$, or k for all other edges if k is even. Therefore, we get that

$$g(\varepsilon) = \begin{cases} \frac{\varepsilon(K_n)}{k}, & \text{if} \quad k \equiv 1(mod 2); \\ \frac{\varepsilon(K_n)-\frac{n}{2}}{k}, & \text{if} \quad k \equiv 0(mod 2). \end{cases}$$

Whence, we have that

$$\alpha(n,k) = g(\varepsilon) - \frac{n}{k} = \begin{cases} \frac{n(n-3)}{2k}, & \text{if} \quad k \equiv 1(mod2); \\ \frac{n(n-2)}{2k}, & \text{if} \quad k \equiv 0(mod2), \end{cases}$$

and

$$|\Phi(g)| = 2^{\alpha(n,k)}(n-2)!^{\frac{n}{k}}, \tag{4.1.3}$$

Similarly, if $k \equiv 0(mod2)$, we get also that

$$|\Phi(g\alpha)| = 2^{\alpha(n,k)}(n-2)!^{\frac{n}{k}} \tag{4.1.4}$$

for an chosen element g,$g \in \mathcal{E}_{[k^{\frac{n}{k}}]}$.

Now for $\forall h \in \mathcal{E}_{[1,k^{\frac{n-1}{k}}]}$, without loss of generality, we assume that $h = (1,2,...,k)$ $(k+1,k+2,...,2k)...((\frac{n-1}{k}-1)k+1,(\frac{n-1}{k}-1)k+2,...,(n-1))(n)$. Then the above statement is also true for the complete graph K_{n-1} with the vertices $1,2,\cdots,n-1$. Notice that the quadricells $n^{1+},n^{2+},\cdots,n^{n-1+}$ can be chosen first in our enumeration and they are not belong to the graph K_{n-1}. According to the Lemma 4.1.2, we get that

$$|\Phi(h)| = 2^{\beta(n,k)}(n-2)!^{\frac{n-1}{k}} \times \frac{2\phi(k)(n-2)!}{|\mathcal{E}_{[1,k^{\frac{n-1}{k}}]}|}, \tag{4.1.5}$$

Where

$$\beta(n,k) = h(\varepsilon) = \begin{cases} \frac{\varepsilon(K_{n-1})}{k} - \frac{n-1}{k} = \frac{(n-1)(n-4)}{2k}, & \text{if} \quad k \equiv 1(mod2); \\ \frac{\varepsilon(K_{n-1})}{k} - \frac{n-1}{k} = \frac{(n-1)(n-3)}{2k}, & \text{if} \quad k \equiv 0(mod2). \end{cases}$$

Combining (4.1.3) − (4.1.5), we get that

$$\begin{aligned} n^L(K_n) &= \frac{1}{2n!} \times (\sum_{k|n} |\mathcal{E}_{[k^{\frac{n}{k}}]}||\Phi(g_0)| + \sum_{l|n,l\equiv 0(mod2)} |\mathcal{E}_{[l^{\frac{n}{l}}]}||\Phi(g_1\alpha)| \\ &+ \sum_{l|(n-1)} |\mathcal{E}_{[1,l^{\frac{n-1}{l}}]}||\Phi(h)|) \\ &= \frac{1}{2n!} \times (\sum_{k|n} \frac{n!2^{\alpha(n,k)}(n-2)!^{\frac{n}{k}}}{k^{\frac{n}{k}}(\frac{n}{k})!} + \sum_{k|n,k\equiv 0(mod2)} \frac{n!2^{\alpha(n,k)}(n-2)!^{\frac{n}{k}}}{k^{\frac{n}{k}}(\frac{n}{k})!} \\ &+ \sum_{k|(n-1),k\neq 1} \frac{n!}{k^{\frac{n-1}{k}}(\frac{n-1}{k})!} \times \frac{2\phi(k)(n-2)!2^{\beta(n,k)}(n-2)!^{\frac{n-1}{k}}}{\frac{(n-1)!}{k^{\frac{n-1}{k}}(\frac{n-1}{k})!}}) \end{aligned}$$

$$= \frac{1}{2}(\sum_{k|n} + \sum_{k|n,k\equiv 0(mod2)})\frac{2^{\alpha(n,k)}(n-2)!^{\frac{n}{k}}}{k^{\frac{n}{k}}(\frac{n}{k})!} + \sum_{k|(n-1),k\neq 1}\frac{\phi(k)2^{\beta(n,k)}(n-2)!^{\frac{n-1}{k}}}{n-1}.$$

For $n = 4$, similar calculation shows that $n^L(K_4) = 11$ by consider the fixing set of permutations in $\mathcal{E}_{[s^{\frac{4}{s}}]}$,$\mathcal{E}_{[1,s^{\frac{3}{s}}]}$, $\mathcal{E}_{[(2s)^{\frac{4}{2s}}]}$,$\alpha\mathcal{E}_{[(2s)^{\frac{4}{2s}}]}$ and $\alpha\mathcal{E}_{[1,1,2]}$. $\natural$

For the orientable case, we get the number $n^O(K_n)$ of orientable complete maps of order n as follows.

Theorem 4.1.2 *The number $n^O((K_n)$ of complete maps of order $n \geq 5$ on orientable surfaces is*

$$n^O(K_n) = \frac{1}{2}(\sum_{k|n} + \sum_{k|n,k\equiv 0(mod2)})\frac{(n-2)!^{\frac{n}{k}}}{k^{\frac{n}{k}}(\frac{n}{k})!} + \sum_{k|(n-1),k\neq 1}\frac{\phi(k)(n-2)!^{\frac{n-1}{k}}}{n-1}.$$

and $n(K_4) = 3$.

Proof According to Tutte's algebraic representation of map, a map $M = (\mathcal{X}_{\alpha,\beta}, \mathcal{P})$ is orientable if and only if for $\forall x \in \mathcal{X}_{\alpha,\beta}$, x and $\alpha\beta x$ are in a same orbit of $\mathcal{X}_{\alpha,\beta}$ under the action of the group $\Psi_I =< \alpha\beta, \mathcal{P} >$. Now applying (1.3.1) in the Corollary 1.3.1 and the Theorem 3.2.1, Similar to the proof of the Theorem 4.1.1, we get the number $n^O(K_n)$ for $n \geq 5$ as follows

$$n^O(K_n) = \frac{1}{2}(\sum_{k|n} + \sum_{k|n,k\equiv 0(mod2)})\frac{(n-2)!^{\frac{n}{k}}}{k^{\frac{n}{k}}(\frac{n}{k})!} + \sum_{k|(n-1),k\neq 1}\frac{\phi(k)(n-2)!^{\frac{n-1}{k}}}{n-1}.$$

and for the complete graph K_4, calculation shows that $n(K_4) = 3$. $\natural$

Notice that $n^O(K_n)+n^N(K_n) = n^L(K_n)$. Therefore, we can also get the number $n^N(K_n)$ of unrooted complete maps of order n on non-orientable surfaces by the Theorem 4.1.1 and the Theorem 4.1.2 as follows.

Theorem 4.1.3 *The number $n^N(K_n)$ of unrooted complete maps of order $n, n \geq 5$ on non-orientable surfaces is*

$$\begin{aligned} n^N(K_n) &= \frac{1}{2}(\sum_{k|n} + \sum_{k|n,k\equiv 0(mod2)})\frac{(2^{\alpha(n,k)}-1)(n-2)!^{\frac{n}{k}}}{k^{\frac{n}{k}}(\frac{n}{k})!} \\ &+ \sum_{k|(n-1),k\neq 1}\frac{\phi(k)(2^{\beta(n,k)}-1)(n-2)!^{\frac{n-1}{k}}}{n-1}, \end{aligned}$$

and $n^N(K_4) = 8$. Where, $\alpha(n,k)$ and $\beta(n,k)$ are same as in Theorem 4.1.1.

For $n = 5$, calculation shows that $n^L(K_5) = 1080$ and $n^O(K_5) = 45$ based on the Theorem 4.1.1 and 4.1.2. For $n = 4$, there are 3 unrooted orientable maps and 8 non-orientable maps shown in the Fig.4.1. All the 11 maps of K_4 on surfaces are non-isomorphic.

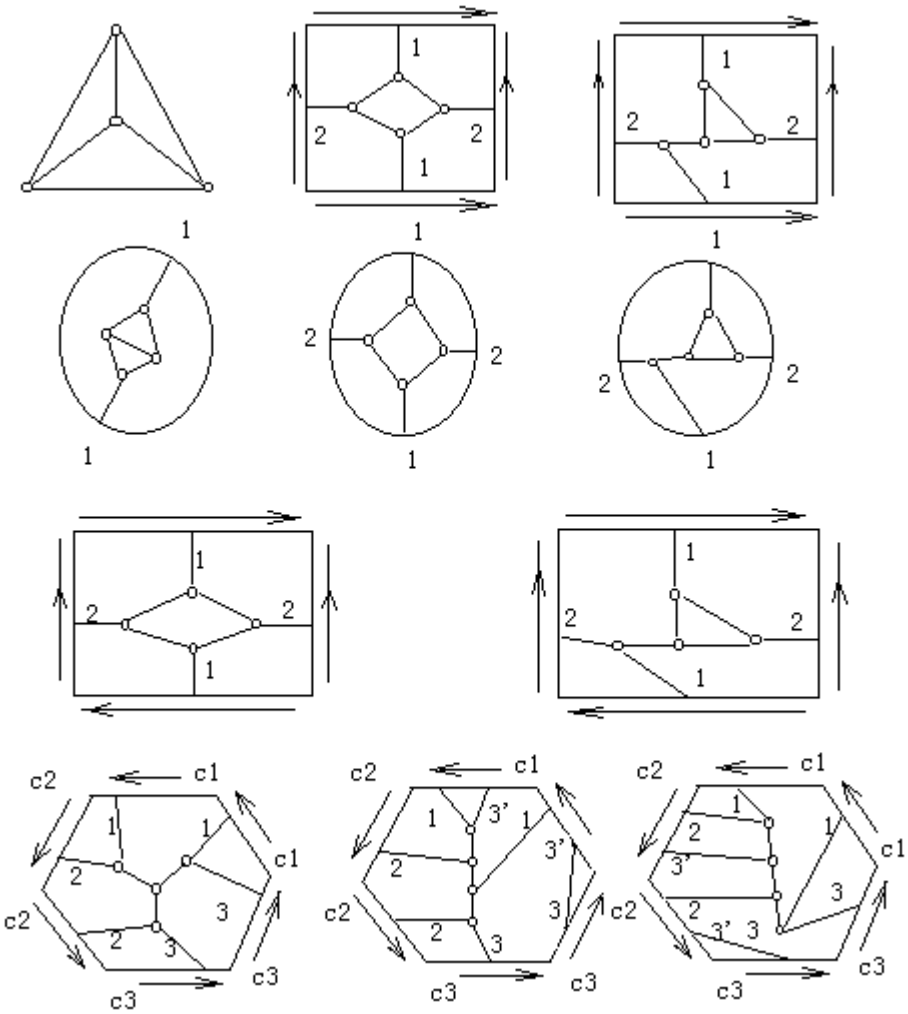

Fig.4.1

Now consider the action of orientation-preserving automorphisms of complete maps, determined in the Theorem 3.2.1 on all orientable embeddings of a complete graph of order n. Similar to the proof of the Theorem 4.1.2, we can get the number of non-equivalent embeddings of a complete graph of order n, which has been done in [43] and the result gotten is same as the result of Mull et al in [54].

§2. The enumeration of a semi-regular graph on surfaces

The non-equivalent embeddings of a semi-regular graph on surfaces are enumerated in the reference [50]. Here, we enumerate the unrooted maps underlying a semi-regular graph on orientable or non-orientable surfaces.

The following lemma is implied in the proof of the Theorem 4.1 in [50].

Lemma 4.2.1 *Let $\Gamma = (V, E)$ be a semi-regular graph. Then for $\xi \in \mathrm{Aut}\Gamma$*

$$|\Phi^O(\xi)| = \prod_{x \in T_\xi^V} (\frac{d(x)}{o(\xi|_{N_\Gamma(x)})} - 1)!$$

and

$$|\Phi^L(\xi)| = 2^{|T_\xi^E| - |T_\xi^V|} \prod_{x \in T_\xi^V} (\frac{d(x)}{o(\xi|_{N_\Gamma(x)})} - 1)!,$$

where, T_ξ^V, T_ξ^E are the representations of orbits of ξ acting on $v(\Gamma)$ and $E(\Gamma)$,respectively and $\xi_{N_\Gamma(x)}$ the restriction of ξ to $N_\Gamma(x)$.

According to the Corollary 1.3.1, we get the following enumeration results.

Theorem 4.2.1 *Let Γ be a semi-regular graph. Then the numbers of unrooted maps on orientable and non-orientable surfaces underlying the graph Γ are*

$$n^O(\Gamma) = \frac{1}{|\mathrm{Aut}\Gamma|}(\sum_{\xi \in \mathrm{Aut}\Gamma} \lambda(\xi) \prod_{x \in T_\xi^V} (\frac{d(x)}{o(\xi|_{N_\Gamma(x)})} - 1)!$$

and

$$n^N(\Gamma) = \frac{1}{|Aut\Gamma|} \times \sum_{\xi \in Aut\Gamma} (2^{|T_\xi^E| - |T_\xi^V|} - 1)\lambda(\xi) \prod_{x \in T_\xi^V} (\frac{d(x)}{o(\xi|_{N_\Gamma(x)})} - 1)!,$$

where $\lambda(\xi) = 1$ if $o(\xi) \equiv 0(mod 2)$ and $\frac{1}{2}$, otherwise.

Proof By the Corollary 1.3.1, we know that

$$n^O(\Gamma) = \frac{1}{2|\mathrm{Aut}_{\frac{1}{2}}\Gamma|} \sum_{g \in \mathrm{Aut}_{\frac{1}{2}}\Gamma} |\Phi_1^O(g)|$$

and

$$n^L(\Gamma) = \frac{1}{2|\mathrm{Aut}_{\frac{1}{2}}\Gamma|} \sum_{g\in \mathrm{Aut}_{\frac{1}{2}}\Gamma} |\Phi_1^T(g)|.$$

According to the Theorem 3.3.4, all the automorphisms of orientable maps underlying the graph Γ are

$$g|^{\mathcal{X}_{\alpha,\beta}} \text{ and } \alpha h|^{\mathcal{X}_{\alpha,\beta}}, g, h \in \mathrm{Aut}\Gamma \text{ with } h \equiv 0(mod 2).$$

and all the automorphisms of non-orientable maps underlying the graph Γ are also

$$g|^{\mathcal{X}_{\alpha,\beta}} \text{ and } \alpha h|^{\mathcal{X}_{\alpha,\beta}}, g, h \in \mathrm{Aut}\Gamma \text{ with } h \equiv 0(mod 2).$$

Whence, we get the number of unrooted orientable maps by the Lemma 4.2.1 as follows.

$$\begin{aligned}
n^O(\Gamma) &= \frac{1}{2|\mathrm{Aut}\Gamma|} \sum_{g\in \mathrm{Aut}\Gamma} |\Phi_1^O(g)| \\
&= \frac{1}{2|\mathrm{Aut}\Gamma|}\{(\sum_{\xi\in \mathrm{Aut}\Gamma} \prod_{x\in T_\xi^V} (\frac{d(x)}{o(\xi|_{N_\Gamma(x)})} - 1)! \\
&+ \sum_{\varsigma\in \mathrm{Aut}\Gamma, o(\varsigma)\equiv 0(mod 2)} \prod_{x\in T_\varsigma^V} (\frac{d(x)}{o(\varsigma|_{N_\Gamma(x)})} - 1)!) \\
&= \frac{1}{|\mathrm{Aut}\Gamma|}(\sum_{\xi\in \mathrm{Aut}\Gamma} \lambda(\xi) \prod_{x\in T_\xi^V} (\frac{d(x)}{o(\xi|_{N_\Gamma(x)})} - 1)!.
\end{aligned}$$

Similarly, we enumerate the unrooted maps on locally orientable surface underlying the graph Γ by (1.3.3) in the Corollary 1.3.1 as follows.

$$\begin{aligned}
n^L(\Gamma) &= \frac{1}{2|\mathrm{Aut}\Gamma|} \sum_{g\in \mathrm{Aut}\Gamma} |\Phi_1^T(g)| \\
&= \frac{1}{2|\mathrm{Aut}\Gamma|}(\sum_{\xi\in \mathrm{Aut}\Gamma}^{|T_\xi^E|-|T_\xi^V|} \prod_{x\in T_\xi^V} (\frac{d(x)}{o(\xi|_{N_\Gamma(x)})} - 1)! \\
&+ \sum_{\varsigma\in \mathrm{Aut}\Gamma, o(\varsigma)\equiv 0(mod 2)} 2^{|T_\varsigma^E|-|T_\varsigma^V|} \prod_{x\in T_\varsigma^V} (\frac{d(x)}{o(\varsigma|_{N_\Gamma(x)})} - 1)!) \\
&= \frac{1}{|\mathrm{Aut}\Gamma|} \sum_{\xi\in \mathrm{Aut}\Gamma} \lambda(\xi) 2^{|T_\xi^E|-|T_\xi^V|} \prod_{x\in T_\xi^V} (\frac{d(x)}{o(\xi|_{N_\Gamma(x)})} - 1)!.
\end{aligned}$$

Notice that $n^O(\Gamma) + n^N(\Gamma) = n^L(\Gamma)$, we get the number of unrooted maps on non-orientable surfaces underlying the graph Γ as follows.

$$\begin{aligned} n^N(\Gamma) &= n^L(\Gamma) - n^O(\Gamma) \\ &= \frac{1}{|Aut\Gamma|} \times \sum_{\xi \in Aut\Gamma} (2^{|T_\xi^E| - |T_\xi^V|} - 1)\lambda(\xi) \prod_{x \in T_\xi^V} (\frac{d(x)}{o(\xi|_{N_\Gamma(x)})} - 1)! \end{aligned}$$

This completes the proof. $\natural$

If Γ is also a k-regular graph, we can get a simple result for the numbers of unrooted maps on orientable or non-orientable surfaces.

Corollary 4.2.1 *Let Γ be a k-regular semi-regular graph. Then the numbers of unrooted maps on orientable or non-orientable surfaces underlying the graph Γ are respective*

$$n^O(\Gamma) = \frac{1}{|\mathrm{Aut}\Gamma|} \times \sum_{g \in \mathrm{Aut}\Gamma} \lambda(g)(k-1)!^{|T_g^V|}$$

and

$$n^N(\Gamma) = \frac{1}{|\mathrm{Aut}\Gamma|} \times \sum_{g \in \mathrm{Aut}\Gamma} \lambda(g)(2^{|T_g^E| - |T_g^V|} - 1)(k-1)!^{|T_g^V|},$$

where, $\lambda(\xi) = 1$ if $o(\xi) \equiv 0(mod 2)$ and $\frac{1}{2}$, otherwise.

Proof In the proof of the Theorem 4.2 in [50], it has been proved that

$$\forall x \in V(\Gamma), \qquad o(\xi_{N_\Gamma(x)}) = 1.$$

Whence, we get $n^O(\Gamma)$ and $n^N(\Gamma)$ by the Theorem 4.2.1. $\natural$

Similarly, if $\Gamma = \mathrm{Cay}(Z_p : S)$ for a prime p, we can also get closed formulas for the number of unrooted maps underlying the graph Γ.

Corollary 4.2.2 *Let $\Gamma = \mathrm{Cay}(Z_p : S)$ be connected graph of prime order p with $(p-1, |S|) = 2$. Then*

$$n^O(\Gamma, \mathcal{M}) = \frac{(|S|-1)!^p + 2p(|S|-1)!^{\frac{p+1}{2}} + (p-1)(|S|-1)!}{4p}$$

and

$$\begin{aligned} n^N(\Gamma,\mathcal{M}) &= \frac{(2^{\frac{p|S|}{2}-p}-1)(|S|-1)!^p+2(2^{\frac{p|S|-2p-2)}{4}}-1)p(|S|-1)!^{\frac{p+1}{2}}}{2p} \\ &+ \frac{(2^{\frac{|S|-2}{2}}-1)(p-1)(|S|-1)!}{4p}. \end{aligned}$$

Proof By the proof of the Corollary 4.1 in [50], we have known that

$$|T_g^V| = \begin{cases} 1, & \text{if} \quad o(g)=p \\ \frac{p+1}{2}, & \text{if} \quad o(g)=2 \\ p, & \text{if} \quad o(g)=1 \end{cases}$$

and

$$|T_g^E| = \begin{cases} \frac{|S|}{2}, & \text{if} \quad o(g)=p \\ \frac{p|S|}{4}, & \text{if} \quad o(g)=2 \\ \frac{p|S|}{2}, & \text{if} \quad o(g)=1 \end{cases}$$

Notice that $\mathrm{Aut}\Gamma = D_p$ (see [3][12]) and there are p elements order 2, one order 1 and $p-1$ order p. Whence, we have

$$n^O(\Gamma,\mathcal{M}) = \frac{(|S|-1)!^p+2p(|S|-1)!^{\frac{p+1}{2}}+(p-1)(|S|-1)!}{4p}$$

and

$$\begin{aligned} n^N(\Gamma,\mathcal{M}) &= \frac{(2^{\frac{p|S|}{2}-p}-1)(|S|-1)!^p+2(2^{\frac{p|S|-2p-2)}{4}}-1)p(|S|-1)!^{\frac{p+1}{2}}}{2p} \\ &+ \frac{(2^{\frac{|S|-2}{2}}-1)(p-1)(|S|-1)!}{4p}. \end{aligned}$$

By the Corollary 4.2.1. $\natural$

§3. The enumeration of a bouquet on surfaces

For any integer $k, k|2n$, let $\mathcal{J}_k$ be the conjugacy class in $S_n[S_2]$ with each cycle in the decomposition of a permutation in $\mathcal{J}_k$ being k-cycle. According to the Corollary

1.3.1, we need to determine the numbers $|\Phi^O(\xi)|$ and $|\Phi^L(\xi)|$ for each automorphism of a map underlying a graph B_n.

Lemma 4.3.1 *Let* $\xi = \prod_{i=1}^{2n/k}(C(i))(\alpha C(i)\alpha^{-1}) \in \mathcal{J}_k$, *where,* $C(i) = (x_{i1}, x_{i2}, \cdots, x_{ik})$ *is a k-cycle, be a cycle decomposition. Then*

(*i*) *If* $k \neq 2n$, *then*

$$|\Phi^O(\xi)| = k^{\frac{2n}{k}}(\frac{2n}{k} - 1)!$$

and if k=2n, then $|\Phi^O(\xi)| = \phi(2n)$.

(*ii*) *If* $k \geq 3$ *and* $k \neq 2n$, *then*

$$|\Phi^L(\xi)| = (2k)^{\frac{2n}{k}-1}(\frac{2n}{k} - 1)!,$$

and

$$|\Phi^L(\xi)| \ = \ 2^n(2n-1)!$$

if $\xi = (x_1)(x_2)\cdots(x_n)(\alpha x_1)(\alpha x_2)\cdots(\alpha x_n)(\beta x_1)(\beta x_2)\cdots(\beta x_n)(\alpha\beta x_1)(\alpha\beta x_2)\cdots(\alpha\beta x_n)$, *and*

$$|\Phi^L(\xi)| \ = \ 1$$

if $\xi = (x_1, \alpha\beta x_1)(x_2, \alpha\beta x_2)\cdots(x_n, \alpha\beta x_n)(\alpha x_1, \beta x_1)(\alpha x_2, \beta x_2)\cdots(\alpha x_n, \beta x_n)$, *and*

$$|\Phi^L(\xi)| = \frac{n!}{(n-2s)!s!}$$

if $\xi = \zeta; \varepsilon_1, \varepsilon_2, \cdots, \varepsilon_n$ *and* $\zeta \in \mathcal{E}_{[1^{n-2s}, 2^s]}$ *for some integer s,* $\varepsilon_i = (1, \alpha\beta)$ *for* $1 \leq i \leq s$ *and* $\varepsilon_j = 1$ *for* $s+1 \leq j \leq n$,*where,* $\mathcal{E}_{[1^{n-2s}, 2^s]}$ *denotes the conjugate class with the type* $[1^{n-2s}, 2^s]$ *in the symmetry group* S_n, *and*

$$|\Phi^L(\xi)| = \phi(2n)$$

if $\xi = \theta; \varepsilon_1, \varepsilon_2, \cdots, \varepsilon_n$ *and* $\theta \in \mathcal{E}_{[n^1]}$ *and* $\varepsilon_i = 1$ *for* $1 \leq i \leq n-1$, $\varepsilon_n = (1, \alpha\beta)$, *where,* $\phi(t)$ *is the Euler function.*

Proof (*i*) Notice that for a given representation of $C(i)$, $i = 1, 2, \cdots, \frac{2n}{k}$, since $< \mathcal{P}_n, \alpha\beta >$ is not transitive on $\mathcal{X}_{\alpha,\beta}$, there is one and only one stable orientable map $\mathcal{B}_n = (\mathcal{X}_{\alpha,\beta}, \mathcal{P}_n)$ with $X = E(B_n)$ and $\mathcal{P}_n = C(\alpha C^{-1}\alpha^-)$, where,

$$C = (x_{11}, x_{21}, \cdots, x_{\frac{2n}{k}1}, x_{21}, x_{22}, \cdots, x_{\frac{2n}{k}2}, x_{1k}, x_{2k}, \cdots, x_{\frac{2n}{k}k}).$$

Counting ways of each possible order for $C(i), i = 1, 2, \cdots, \frac{2n}{k}$, and different representations for $C(i)$, we know that

$$|\Phi^O(\xi)| = k^{\frac{2n}{k}}(\frac{2n}{k} - 1)!$$

for $k \neq 2n$.

Now if $k = 2n$, then the permutation itself is a map with the underlying graph B_n. Whence, it is also an automorphism of the map with the permutation is its power. Therefore, we get that

$$|\Phi^O(\xi)| = \phi(2n)$$

.

(ii) For $k \geq 3$ and $k \neq 2n$, since the group $< \mathcal{P}_n, \alpha\beta >$ is transitive on $\mathcal{X}_{\alpha,\beta}$ or not, we can interchange $C(i)$ by $\alpha C(i)^{-1}\alpha^{-1}$ for each cycle not containing the quadricell x_{11}. Notice that we only get the same map if the two sides of some edges are interchanged altogether or not. Whence, we get that

$$|\Phi^L(\xi)| = 2^{\frac{2n}{k}-1}k^{\frac{2n}{k}-1}(\frac{2n}{k} - 1)! = (2k)^{\frac{2n}{k}-1}(\frac{2n}{k} - 1)!.$$

Now if $\xi = (x_1, \alpha\beta x_1)(x_2, \alpha\beta x_2)\cdots(x_n, \alpha\beta x_n)(\alpha x_1, \beta x_1)(\alpha x_2, \beta x_2)\cdots(\alpha x_n, \beta x_n)$, there is one and only one stable map $(\mathcal{X}_{\alpha,\beta}, \mathcal{P}_n^1)$ under the action of ξ, where

$$\mathcal{P}_n^1 = (x_1, x_2, \cdots, x_n, \alpha\beta x_1, \alpha\beta x_2, \cdots, \alpha\beta x_n)(\alpha x_1, \beta x_n, \cdots, \beta x_1, \alpha x_n, \cdots, \alpha x_1).$$

Which is an orientable map. Whence, $|\Phi^L(\xi)| = |\Phi^O(\xi)| = 1$.

If $\xi = (x_1)(x_2)\cdots(x_n)(\alpha x_1)(\alpha x_2)\cdots(\alpha x_n)(\beta x_1)(\beta x_2)\cdots(\beta x_n)(\alpha\beta x_1)(\alpha\beta x_2)$ $\cdots(\alpha\beta x_n)$, we can interchange $(\alpha\beta x_i)$ with (βx_i) and obtain different embeddings of B_n on surfaces. Whence, we know that

$$|\Phi^L(\xi)| = 2^n(2n - 1)!.$$

Now if $\xi = (\zeta; \varepsilon_1, \varepsilon_2, \cdots, \varepsilon_n)$ and $\zeta \in \mathcal{E}_{[1^{n-2s}, 2^s]}$ for some integer s, $\varepsilon_i = (1, \alpha\beta)$ for $1 \leq i \leq s$ and $\varepsilon_j = 1$ for $s + 1 \leq j \leq n$, we can not interchange $(x_i, \alpha\beta x_i)$ with

$(\alpha x_i, \beta x_i)$ to get different embeddings of B_n for it just interchanging the two sides of one edge. Whence, we get that

$$|\Phi^L(\xi)| = \frac{n!}{1^{n-2s}(n-2s)!2^s s!} \times 2^s = \frac{n!}{(n-2s)!s!}.$$

For $\xi = (\theta; \varepsilon_1, \varepsilon_2, \cdots, \varepsilon_n)$, $\theta \in \mathcal{E}_{[n^1]}$ and $\varepsilon_i = 1$ for $1 \leq i \leq n-1$, $\varepsilon_n = (1, \alpha\beta)$, we can not get different embeddings of B_n by interchanging the two conjugate cycles, whence, we get that

$$|\Phi^L(\xi)| = |\Phi^O(\xi)| = \phi(2n).$$

This completes the proof. $\natural$

Recall that the *cycle index of a group* G, denoted by $Z(G; s_1, s_2, \cdots, s_n)$, is defined by ([30])

$$Z(G; s_1, s_2, \cdots, s_n) = \frac{1}{|G|} \sum_{g \in G} s_1^{\lambda_1(g)} s_2^{\lambda_2(g)} \cdots s_n^{\lambda_n(g)},$$

where, $\lambda_i(g)$ is the number of i-cycles in the cycle decomposition of g. For the symmetric group S_n, its cycle index is known as follows:

$$Z(S_n; s_1, s_2, \cdots, s_n) = \sum_{\lambda_1 + 2\lambda_2 + \cdots + k\lambda_k = n} \frac{s_1^{\lambda_1} s_2^{\lambda_2} \cdots s_k^{\lambda_k}}{1^{\lambda_1}\lambda_1! 2^{\lambda_2}\lambda_2! \cdots k^{\lambda_k}\lambda_k!}.$$

For example, we have that $Z(S_2) = \frac{s_1^2 + s_2}{2}$. By a result of Polya ([56]), we know the cycle index of $S_n[S_2]$ as follows:

$$Z(S_n[S_2]; s_1, s_2, \cdots, s_{2n}) = \frac{1}{2^n n!} \sum_{\lambda_1 + 2\lambda_2 + \cdots + k\lambda_k = n} \frac{(\frac{s_1^2 + s_2}{2})^{\lambda_1} (\frac{s_2^2 + s_4}{2})^{\lambda_2} \cdots (\frac{s_k^2 + s_{2k}}{2})^{\lambda_k}}{1^{\lambda_1}\lambda_1! 2^{\lambda_2}\lambda_2! \cdots k^{\lambda_k}\lambda_k!}$$

Now we can count maps on surfaces with an underlying graph B_n.

Theorem 4.3.1 *The number $n^O(B_n)$ of non-isomorphic maps on orientable surfaces underlying a graph B_n is*

$$\begin{aligned} n^O(B_n) &= \sum_{k|2n, k \neq 2n} k^{\frac{2n}{k}-1} (\frac{2n}{k} - 1)! \frac{1}{(\frac{2n}{k})!} \frac{\partial^{\frac{2n}{k}} (Z(S_n[S_2]))}{\partial s_k^{\frac{2n}{k}}}|_{s_k=0} \\ &+ \phi(2n) \frac{\partial (Z(S_n[S_2]))}{\partial s_{2n}}|_{s_{2n}=0} \end{aligned}$$

Proof According to the formula (1.3.1) in the Corollary 1.3.1, we know that

$$n^O(B_n) = \frac{1}{2 \times 2^n n!} \sum_{\xi \in S_n[S_2] \times \prec\alpha\succ} |\Phi^T(\xi)|.$$

Now since for $\forall \xi_1, \xi_2 \in S_n[S_2]$, if there exists an element $\theta \in S_n[S_2]$, such that $\xi_2 = \theta\xi_1\theta^{-1}$, then we have that $|\Phi^O(\xi_1)| = |\Phi^O(\xi_2)|$ and $|\Phi^O(\xi)| = |\Phi^O(\xi\alpha)|$. Notice that $|\Phi^O(\xi)|$ has been gotten by the Lemma 4.3.1. Using the Lemma 4.3.1(i) and the cycle index $Z(S_n[S_2])$, we get that

$$\begin{aligned} n^O(B_n) &= \frac{1}{2 \times 2^n n!}\Big(\sum_{k|2n, k\neq 2n} k^{\frac{2n}{k}-1}\big(\frac{2n}{k}-1\big)!|\mathcal{J}_k| + \phi(2n)|\mathcal{J}_{2n}|\Big) \\ &= \sum_{k|2n, k\neq 2n} k^{\frac{2n}{k}-1}\big(\frac{2n}{k}-1\big)!\frac{1}{(\frac{2n}{k})!}\frac{\partial^{\frac{2n}{k}}(Z(S_n[S_2]))}{\partial s_k^{\frac{2n}{k}}}|_{s_k=0} \\ &+ \phi(2n)\frac{\partial(Z(S_n[S_2]))}{\partial s_{2n}}|_{s_{2n}=0} \quad \natural \end{aligned}$$

Now we consider maps on the non-orientable surfaces with an underlying graph B_n. Similar to the discussion of the Theorem 4.1, we get the following enumeration result for the non-isomorphic maps on the non-orientable surfaces.

Theorem 4.3.2 *The number $n^N(B_n)$ of non-isomorphic maps on the non-orientable surfaces with an underlying graph B_n is*

$$\begin{aligned} n^N(B_n) &= \frac{(2n-1)!}{n!} + \sum_{k|2n, 3\leq k<2n} (2k)^{\frac{2n}{k}-1}\big(\frac{2n}{k}-1\big)!\frac{\partial^{\frac{2n}{k}}(Z(S_n[S_2]))}{\partial s_k^{\frac{2n}{k}}}|_{s_k=0} \\ &+ \frac{1}{2^n n!}\Big(\sum_{s\geq 1}\frac{n!}{(n-2s)!s!} + 4^n(n-1)!\big(\frac{\partial^n(Z(S_n[S_2]))}{\partial s_2^n}|_{s_2=0} - \lfloor\frac{n}{2}\rfloor\big)\Big). \end{aligned}$$

Proof Similar to the proof of the Theorem 4.3.1, applying the formula (1.3.3) in the Corollary 1.3.1 and the Lemma 4.3.1(ii), we get that

$$\begin{aligned} n^L(B_n) &= \frac{(2n-1)!}{n!} + \phi(2n)\frac{\partial^n(Z(S_n[S_2]))}{\partial s_{2n}^n}|_{s_{2n}=0} \\ &+ \frac{1}{2^n n!}\Big(\sum_{s\geq 0}\frac{n!}{(n-2s)!s!} + 4^n(n-1)!\big(\frac{\partial^n(Z(S_n[S_2]))}{\partial s_2^n}|_{s_2=0} - \lfloor\frac{n}{2}\rfloor\big)\Big) \\ &+ \sum_{k|2n, 3\leq k<2n} (2k)^{\frac{2n}{k}-1}\big(\frac{2n}{k}-1\big)!\frac{\partial^{\frac{2n}{k}}(Z(S_n[S_2]))}{\partial s_k^{\frac{2n}{k}}}|_{s_k=0}. \end{aligned}$$

Notice that $n^O(B_n) + n^N(B_n) = n^L(B_n)$. Applying the result in the Theorem 4.3.1, we know that

$$\begin{aligned} n^N(B_n) &= \frac{(2n-1)!}{n!} + \sum_{k|2n, 3\le k<2n} (2k)^{\frac{2n}{k}-1}(\frac{2n}{k}-1)!\frac{\partial^{\frac{2n}{k}}(Z(S_n[S_2]))}{\partial s_k^{\frac{2n}{k}}}|_{s_k=0} \\ &+ \frac{1}{2^n n!}(\sum_{s\ge 1}\frac{n!}{(n-2s)!s!} + 4^n(n-1)!(\frac{\partial^n(Z(S_n[S_2]))}{\partial s_2^n}|_{s_2=0} - \lfloor\frac{n}{2}\rfloor)). \end{aligned}$$

This completes the proof. $\natural$

Calculation shows that

$$Z(S_1[S_2]) = \frac{s_1^2 + s_2}{2}$$

and

$$Z(S_2[S_2]) = \frac{s_1^4 + 2s_1^2 s_2 + 3s_2^2 + 2s_4}{8},$$

For $n = 2$, calculation shows that there are 1 map on the plane, 2 maps on the projective plane, 1 map on the torus and 2 maps on the Klein bottle. All of those maps are non-isomorphic and same as the results gotten by the Theorem 4.3.1 and 4.3.2, which are shown in the Fig. 2.

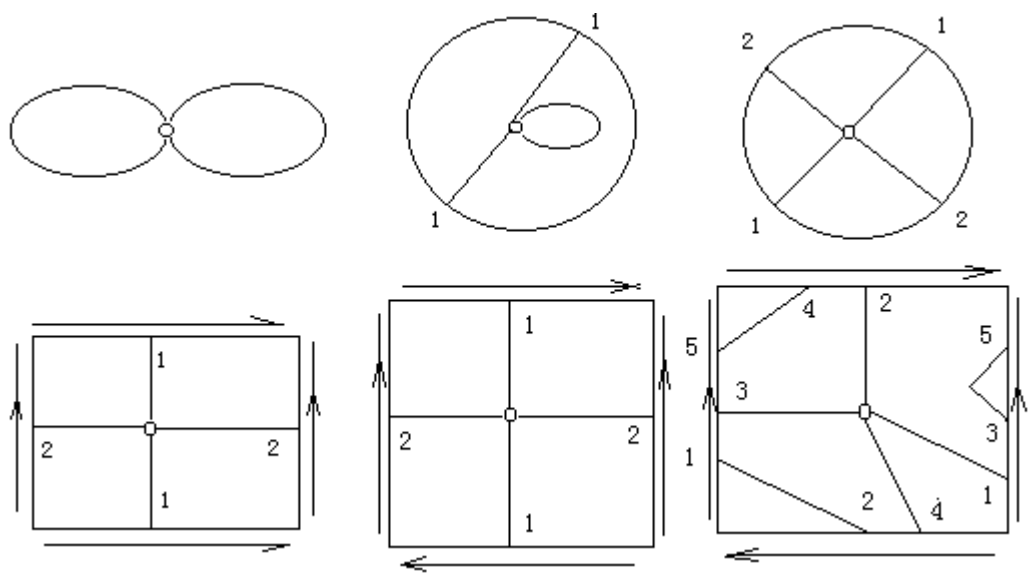

Fig. 4.2

§4. A classification of the closed s-manifolds

According to the Theorem 1.2.8, We can classify the closed s-manifolds by triangular maps with valency in $\{5, 6, 7\}$ as follows:

Classical Type:

(1) $\Delta_1 = \{5 - regular\ triangular\ maps\}$ (*elliptic*);
(2) $\Delta_2 = \{6 - regular\ triangular\ maps\}$(*euclid*);
(3) $\Delta_3 = \{7 - regular\ triangular\ maps\}$(*hyperbolic*).

Smarandache Type:

(4) $\Delta_4 = \{triangular\ maps\ with\ vertex\ valency\ 5\ and\ 6\}$ (*euclid-elliptic*);
(5) $\Delta_5 = \{triangular\ maps\ with\ vertex\ valency\ 5\ and\ 7\}$ (*elliptic-hyperbolic*);
(6) $\Delta_6 = \{triangular\ maps\ with\ vertex\ valency\ 6\ and\ 7\}$ (*euclid-hyperbolic*);
(7) $\Delta_7 = \{triangular\ maps\ with\ vertex\ valency\ 5, 6\ and\ 7\}$ (*mixed*).

We prove each type is not empty in this section.

Theorem 4.4.1 *For classical types $\Delta_1 \sim \Delta_3$, we have that*

(1) $\Delta_1 = \{O_{20}, P_{10}\}$;
(2) $\Delta_2 = \{T_i, K_j, 1 \leq i, j \leq +\infty\}$;
(3) $\Delta_3 = \{H_i, 1 \leq i \leq +\infty\}$,

*where, O_{20}, P_{10} are shown in the Fig.*4.3, *T_3, K_3 are shown in the Fig.* 4.4 *and H_i is the Hurwitz maps, i.e., triangular maps of valency* 7.

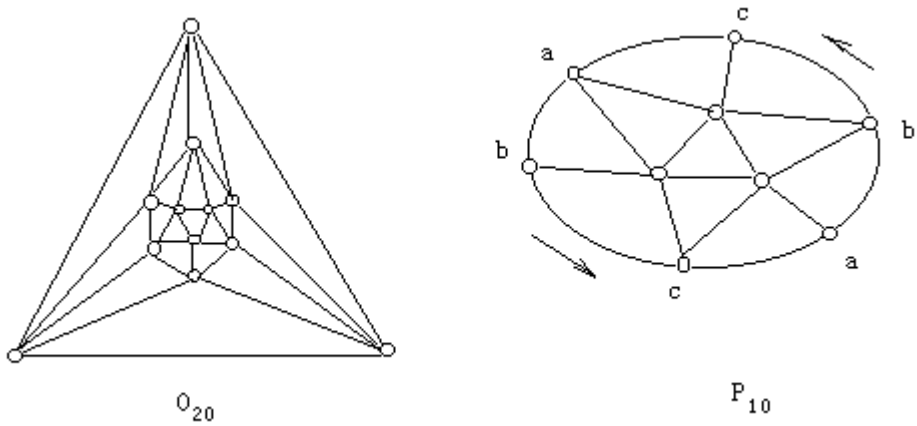

Fig. 4.3

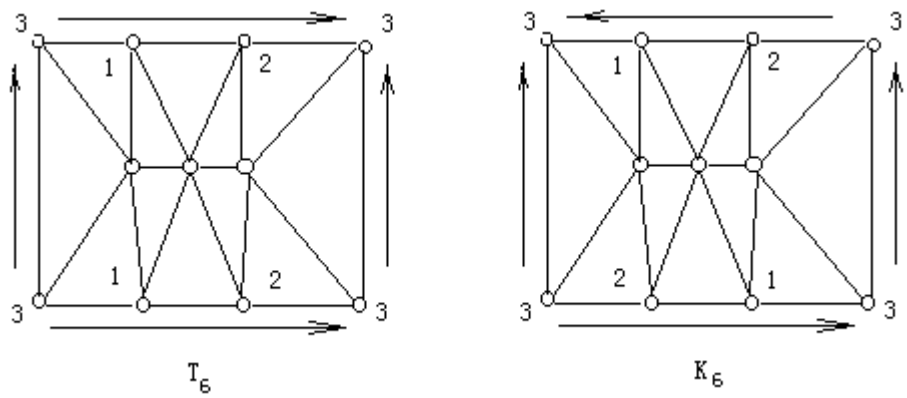

Fig. 4.4

Proof If M is a k-regular triangulation, we get that $2\varepsilon(M) = 3\phi(M) = k\nu(M)$. Whence, we have

$$\varepsilon(M) = \frac{3\phi(M)}{2} \text{ and } \nu(M) = \frac{3\varepsilon(M)}{k}.$$

By the Euler-Poincare formula, we know that

$$\chi(M) = \nu(M) - \varepsilon(M) + \phi(M) = (\frac{3}{k} - \frac{1}{2})\phi(M).$$

If M is elliptic, then $k = 5$. Whence, $\chi(M) = \frac{\phi(M)}{10} > 0$. Therefore, if M is orientable, then $\chi(M) = 2$, Whence, $\phi(M) = 20, \nu(M) = 12$ and $\varepsilon(M) = 30$, which is the map O_{20}. If if M is non-orientable, then $\chi(M) = 1$, Whence, $\phi(M) = 10, \nu(M) = 6$ and $\varepsilon(M) = 15$, which is the map P_{10}.

If M is euclid, then $k = 6$. Whence, $\chi(M) = 0$, i.e., M is a 6-regular triangulation T_i or K_j for some integer i or j on the torus or Klein bottle, which is infinite.

If M is hyperbolic, then $k = 7$. Whence, $\chi(M) < 0$. M is a 7-regular triangulation, i.e., the Hurwitz map. According to the results in [65], there are infinite Hurwitz maps on surfaces. This completes the proof. $\natural$

For the Smarandache Types, the situation is complex. But we can also obtain the enumeration results for each of the types $\Delta_4 \sim \Delta_7$. First, we prove a condition for the numbers of vertex valency 5 with 7.

Lemma 4.4.1 *Let Let $\mathcal{C}(T, n)$ be an s-manifold. Then*

$$v_7 \geq v_5 + 2$$

if $\chi(\mathcal{C}(T,n)) \leq -1$ *and*

$$v_7 \leq v_5 - 2$$

if $\chi(\mathcal{C}(T,n)) \geq 1$. *where* v_i *denotes the number of vertices of valency* i *in* $\mathcal{C}(T,n)$.

Proof Notice that we have know

$$\varepsilon(\mathcal{C}(T,n)) = \frac{-\chi(\mathcal{C}(T,n))}{\frac{1}{3} - \frac{2}{k}},$$

where k is the average valency of vertices in $\mathcal{C}(T,n)$. Since

$$k = \frac{5v_5 + 6v_6 + 7v_7}{v_5 + v_6 + v_7}$$

and $\varepsilon(\mathcal{C}(T,n)) \geq 3$. Therefore, we get that

(i) If $\chi(\mathcal{C}(T,n)) \leq -1$, then

$$\frac{1}{3} - \frac{2v_5 + 2v_6 + 2v_7}{5v_5 + 6v_6 + 7v_7} > 0,$$

i.e., $v_7 \geq v_5 + 1$. Now if $v_7 = v_5 + 1$, then

$$5v_5 + 6v_6 + 7v_7 = 12v_5 + 6v_6 + 7 \equiv 1(mod 2).$$

Contradicts to the fact that $\sum_{v \in V(\Gamma)} \rho_\Gamma(v) = 2\varepsilon(\Gamma) \equiv 0(mod 2)$ for a graph Γ. Whence we get that

$$v_7 \geq v_5 + 2.$$

(ii) If $\chi(\mathcal{C}(T,n)) \geq 1$, then

$$\frac{1}{3} - \frac{2v_5 + 2v_6 + 2v_7}{5v_5 + 6v_6 + 7v_7} < 0,$$

i.e., $v_7 \leq v_5 - 1$. Now if $v_7 = v_5 - 1$, then

$$5v_5 + 6v_6 + 7v_7 = 12v_5 + 6v_6 - 7 \equiv 1(mod 2).$$

Also contradicts to the fact that $\sum_{v\in V(\Gamma)}\rho_\Gamma(v) = 2\varepsilon(\Gamma) \equiv 0(mod2)$ for a graph Γ. Whence, we have that

$$v_7 \leq v_5 - 2. \qquad \natural$$

Corollary 4.4.1 *There is no an s-manifold $\mathcal{C}(T,n)$ such that*

$$|v_7 - v_5| \leq 1,$$

where v_i denotes the number of vertices of valency i in $\mathcal{C}(T,n)$.

Define an *operator* $\Xi : M \to M^*$ on a triangulation M of a surface as follows:

*Choose each midpoint on each edge in M and connect the midpoint in each triangle as shown in the Fig.*4.5. *Then the resultant M^* is a triangulation of the same surface and the valency of each new vertex is* 6.

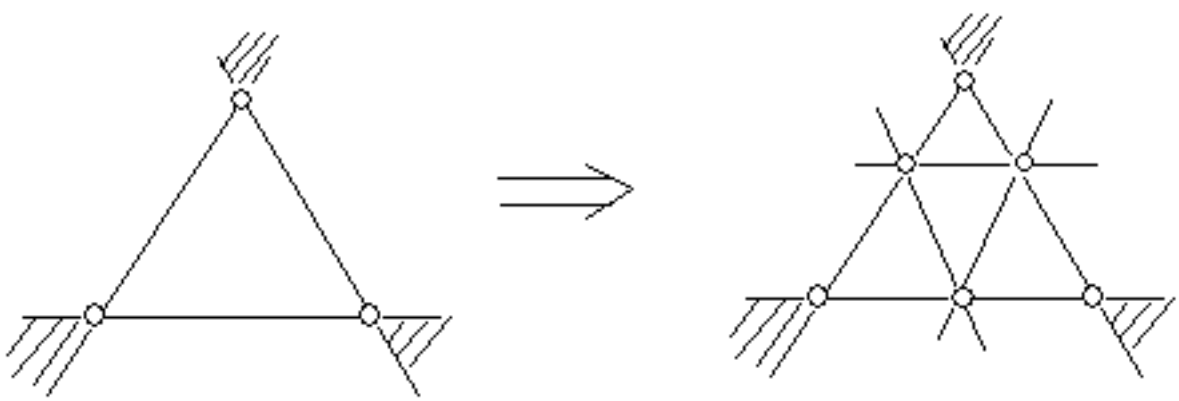

Fig. 4.5

Then we get the following result.

Theorem 4.4.2 *For the Smarandache Types $\Delta_4 \sim \Delta_7$, we have*

(i) $|\Delta_5| \geq 2$;

(ii) Each of $|\Delta_4|, |\Delta_6|$ and $|\Delta_7|$ is infinite.

Proof For $M \in \Delta_4$, let k be the average valency of vertices in M, since

$$k = \frac{5v_5 + 6v_6}{v_5 + v_6} < 6 \text{ and } \varepsilon(M) = \frac{-\chi(M)}{\frac{1}{3} - \frac{2}{k}},$$

we have that $\chi(M) \geq 1$. Calculation shows that $v_5 = 6$ if $\chi(M) = 1$ and $v_5 = 12$ if $\chi(M) = 2$. We can construct a triangulation with vertex valency $5, 6$ on the plane and the projective plane in the Fig. 4.6.

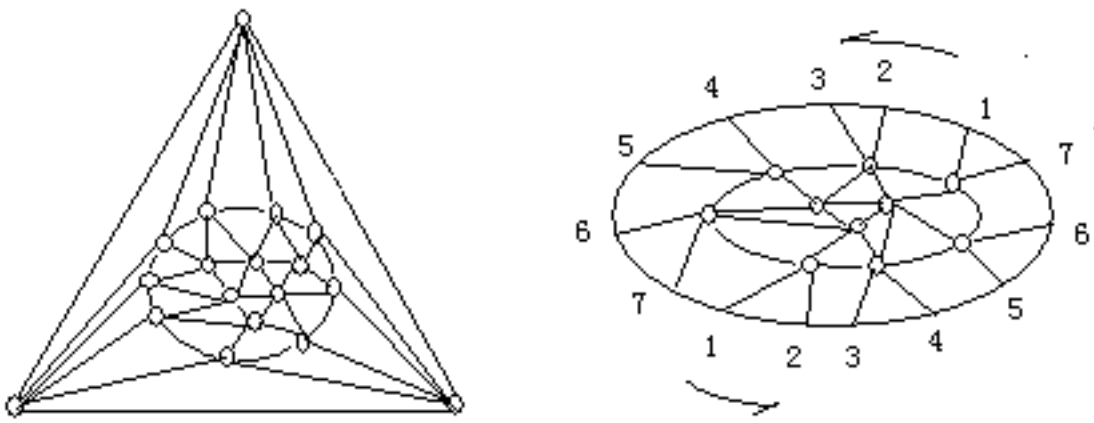

(a) (b)

Fig. 4.6

Now let M be a map in the Fig. 4.6. Then M^{Θ} is also a triangulation of the same surface with vertex valency $5, 6$ and $M^{\Theta} \neq M$. Whence, $|\Delta_4|$ is infinite.

For $M \in \Delta_5$, by the Lemma 4.4.1, we know that $v_7 \leq v_5 - 2$ if $\chi(M) \geq 1$ and $v_7 \geq v_5 + 2$ if $\chi(M) \leq -1$. We construct a triangulation on the plane and on the projective plane in the Fig.4.6.

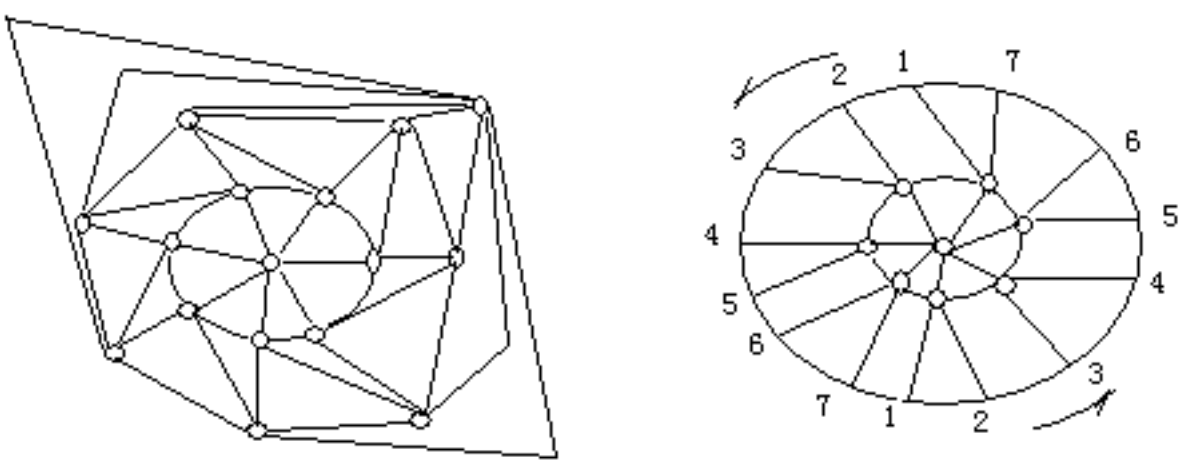

(a) (b)

Fig. 4.7

For $M \in \Delta_6$, we know that $k = \frac{6v_6+7v_7}{v_6+v_7} > 6$. Whence, $\chi(M) \leq -1$. Since $3\phi(M) = 6v_6 + 7v_7 = 2\varepsilon(M)$, we get that

$$v_6 + v_7 - \frac{6v_6 + 7v_7}{2} + \frac{6v_6 + 7v_7}{3} = \chi(M).$$

Therefore, we have $v_7 = -\chi(M)$. Since there are infinite Hurwitz maps M on surfaces. Then the resultant triangular map M^* is a triangulation with vertex valency $6, 7$ and $M^* \neq M$. Whence, $|\Delta_6|$ is infinite.

For $M \in \Delta_7$, we construct a triangulation with vertex valency $5, 6, 7$ in the Fig. 4.8 as follows.

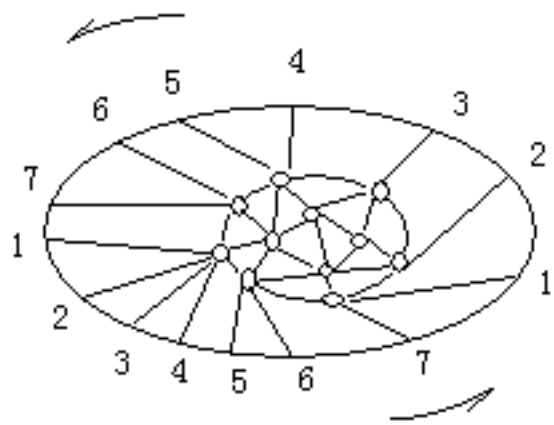

Fig. 4.8

Let M be one of the maps in the Fig.4.8. Then the action of Θ on M results infinite triangulations of valency $5, 6$ or 7. This completes the proof. $\natural$

Conjecture 4.4.1 *The number $|\Delta_5|$ is infinite.*

Chapter 5 Open Problems for Combinatorial Maps

As a well kind of decomposition of a surface, maps are more concerned by mathematician in the last century, especially in the enumeration of maps ([33] − [35]) and graphs embedding on a surface ([22], [35], [53], [70]). This has its own right,also its contribution to other branch of mathematics and sciences. Among those map application to other branch mathematics, one typical example is its contribution to the topology for the classification of compact surfaces by one face, or its dual, one vertex maps, i.e., a bouquet B_n on surfaces. Another is its contribution to the group theory for finding the Higman-Sims group (a sporadic simple group ([6])) and an one sentence proof of the Nielsen-Schreier theorem, i.e., *every subgroup of a free group is also free* ([63] − [64]). All those applications are to the algebra, a branch of mathematics without measures. From this view, the topics discussed in the graph theory can be seen just the algebraic questions. But our world is full of measures. For applying combinatorics to other branch of mathematics, a good idea is pullback measures on combinatorial objects again, ignored by the classical combinatorics and reconstructed or make combinatorial generalization for the classical mathematics, such as, the algebra, differential geometry, Riemann geometry, Smarandache geometries, $\cdots$ and the mechanics, theoretical physics, $\cdots$. For doing this, the most possible way is, perhaps by the combinatorial maps. Here is a collection of open problems concerned maps with the Riemann geometry and Smarandache geometries.

5.1 The uniformization theorem for simple connected Riemann surfaces

The *uniformization theorem* for simple connected Riemann surfaces is one of those beautiful results in the Riemann surface theory, which is stated as follows([18]).

If $\mathcal{S}$ is a simple connected Riemann surface, then $\mathcal{S}$ is conformally equivalent to one and only one of the following three:

(a) $\mathcal{C} \bigcup \infty$;

(b) $\mathcal{C}$;

(c) $\triangle = \{z \in \mathcal{C} | |z| < 1\}$.

We have proved in the Chapter 2 that any automorphism of a map is conformal. Therefore, we can also introduced the conformal mapping between maps. Then, *how can we define the conformal equivalence for maps enabling us to get the uniformization theorem of maps? What is the correspondence class maps with the three type* $(a) - (c)$ *Riemann surfaces?*

5.2 **The Riemann-Roch theorem**

Let $\mathcal{S}$ be a Riemann surface. A *divisor* on $\mathcal{S}$ is a formal symbol

$$\mathcal{U} = \prod_{i=1}^{k} P_i^{\alpha(P_i)}$$

with $P_i \in \mathcal{S}$, $\alpha(P_i) \in \mathbf{Z}$. Denote by $Div(\mathcal{S})$ the free commutative group on the points in $\mathcal{S}$ and define

$$deg\mathcal{U} = \sum_{i=1}^{k} \alpha(P_i).$$

Denote by $\mathcal{H}(\mathcal{S})$ the field of meromorphic function on $\mathcal{S}$. Then for $\forall f \in \mathcal{H}(\mathcal{S}) \setminus \{0\}$, f determines a divisor $(f) \in Div(\mathcal{S})$ by

$$(f) = \prod_{P \in \mathcal{S}} P^{ord_P f},$$

where, if we write $f(z) = z^n g(z)$ with g holomorphic and non-zero at $z = P$, then the $ord_P f = n$. For $\mathcal{U}_1 = \prod_{P \in \mathcal{S}} P^{\alpha_1(P)}, \mathcal{U}_2 = \prod_{P \in \mathcal{S}} P^{\alpha_2(P)}, \in Div(\mathcal{S})$, call $\mathcal{U}_1 \geq \mathcal{U}_2$ if $\alpha_1(P) \geq \alpha_2(P)$. Now we define a vector space

$$L(\mathcal{U}) = \{f \in \mathcal{H}(\mathcal{S}) | (f) \geq \mathcal{U}, \mathcal{U} \in Div(\mathcal{S})\}$$

$$\Omega(\mathcal{U}) = \{\omega | \omega \ is \ an \ abelian \ differential \ with \ (\omega) \geq \mathcal{U}\}.$$

The Riemann-Roch theorem says that([71])

$$dim(L(\mathcal{U}^{-1})) = deg\mathcal{U} - g(\mathcal{S}) + 1 + dim\Omega(\mathcal{S}).$$

Comparing with the divisors and their vector space, there ia also cycle space and cocycle space in graphical space theory ([35]). *What is their relation? Whether can we rebuilt the Riemann-Roch theorem by map theory?*

5.3 **Combinatorial construction of an algebraic curve of genus**

A *complex plane algebraic curve* $\mathcal{C}_l$ is a homogeneous equation $f(x, y, z) = 0$ in $P_2\mathcal{C} = (C^2 \setminus (0, 0, 0))/\sim$, where $f(x, y, z)$ is a polynomial in x, y and z with coefficients in $\mathcal{C}$. The degree of $f(x, y, z)$ is said the *degree of the curve* $\mathcal{C}_l$. For a Riemann surface S, a well-known result is ([71])*there is a holomorphic mapping* $\varphi : S \to P_2\mathcal{C}$ *such that* $\varphi(S)$ *is a complex plane algebraic curve and*

$$g(S) = \frac{(d(\varphi(S)) - 1)(d(\varphi(S)) - 2)}{2}.$$

By map theory, we know a combinatorial map also is on a surface with genus. Then *whether we can get an algebraic curve by all edges in a map or by make operations on the vertices or edges of the map to get plane algebraic curve with given k-multiple points?* and *how do we find the equation* $f(x, y, z) = 0$*?*

5.4 **Classification of s-manifolds by maps**

We have classified the closed s-manifolds by maps in the Section 4 of Chapter 4. For the general s-manifolds, their correspondence combinatorial model is the maps on surfaces with boundary, founded by Bryant and Singerman in 1985 ([8]). The later is also related to the modular groups of spaces and need to investigate further itself. The questions are

(i) *how can we combinatorially classify the general s-manifolds by maps with boundary?*

(ii) *how can we find the automorphism group of an s-manifold?*

(iii) *how can we know the numbers of non-isomorphic s-manifolds, with or without root?*

(iv) *find rulers for drawing an s-manifold on a surface, such as, the torus, the projective plane or Klein bottle, not the plane.*

The Smarandache manifolds only using the triangulations of surfaces with vertex valency in $\{5, 6, 7\}$. Then *what are the geometrical mean of the other maps, such as, the 4-regular maps on surfaces.* It is already known that the later is related to the Gauss cross problem of curves([35]). May be we can get a geometry even more general than that of the Smarandache geometries.

5.5 **Gauss mapping among surfaces**

In the classical differential geometry, a *Gauss mapping* among surfaces is defined as follows([42]):

Let $\mathcal{S} \subset R^3$ be a surface with an orientation $\mathbf{N}$. *The mapping $N : \mathcal{S} \to R^3$ takes its value in the unit sphere*

$$S^2 = \{(x, y, z) \in R^3 | x^2 + y^2 + z^2 = 1\}$$

along the orientation $\mathbf{N}$. *The map $N : \mathcal{S} \to S^2$, thus defined, is called the Gauss mapping.*

we know that for a point $P \in \mathcal{S}$ such that the Gaussian curvature $K(P) \neq 0$ and V a connected neighborhood of P with K does not change sign,

$$K(P) = \lim_{A \to 0} \frac{N(A)}{A},$$

where A is the area of a region $B \subset V$ and $N(A)$ is the area of the image of B by the Gauss mapping $N : \mathcal{S} \to S^2$. The questions are

(i) *what is its combinatorial meaning of the Gauss mapping? How to realizes it by maps?*

(ii) *how we can define various curvatures for maps and rebuilt the results in the classical differential geometry?*

5.6 **The Gauss-Bonnet theorem**

Let $\mathcal{S}$ be a compact orientable surface. Then

$$\int\int_{\mathcal{S}} K d\sigma = 2\pi\chi(\mathcal{S}),$$

where K is Gaussian curvature on $\mathcal{S}$.

This is the famous *Gauss-Bonnet theorem* for compact surface ([14], [71] − [72]). This theorem should has a combinatorial form. The questions are

(i) *how can we define the area of a map?* (Notice that we give a definition of non-Euclid area of maps in Chapter 2.)

(ii) can we rebuilt the Gauss-Bonnet theorem by maps?

5.7 **Riemann manifolds**

A Riemann surface is just a Riemann 2-manifold. A *Riemann n-manifold* (M, g) is a n-manifold M with a Riemann metric g. Many important results in Riemann surfaces are generalized to Riemann manifolds with higher dimension ([14], [71] − [72]). For example, let $\mathcal{M}$ be a complete, simple-connected Riemann n-manifold with constant sectional curvature c, then we know that $\mathcal{M}$ *is isometric to one of the model spaces* $\mathcal{R}^n, S_{\mathcal{R}^n}$ *or* $H_{\mathcal{R}^n}$. There is also a combinatorial map theory for higher dimension manifolds (see [67] − [68]). *Whether can we systematically rebuilt the Riemann manifold theory by combinatorial maps? or can we make a combinatorial generalization of results in the Riemann geometry, for example, the Chern-Gauss-Bonnet theorem (*[14], [37], [71]*)?* If we can, a new system for the Einstein's relative theory will be found.

References

[1] R.D.M.Accola, On the number of automorphisms of a closed Riemann surface, Tran.Amer.Math.Soc.,vol.131,398-408(1968).

[2] N.L.Alling, *Foundation of the theory of Klein surfaces*, Lect.notes in Math.,219, Springer-Verlag, Berlin,etc.(1971).

[3] B.Alspach, Point-symmetric graphs and digraphs of prime order and transitive permutation groups of prime degree, J.Combin.Theory,Ser.B, 15(1973),12-17.

[4] C.Ashbacher, Smarandache geometries, *Smarandache Notions Journal*, Vol.8, No. 1-2-3(1997),212-215.

[5] L.Babai,Automorphism groups, isomorphism, reconstruction, in R. Graham, M.Grotschel and L.Lovasz ed: *Handbook of Combinatorics*,Elsevier Science B.V, (1995), 1447-1540.

[6] N.L.Biggs and A.T.White, *Permutation Groups and Combinatoric Structure*, Cambridge University Press (1979).

[7] L.Brankovic, M.Miller et al, A note on constructing large Cayley graphs of given degree and diameter by voltage assignments,*The Electronic J. Combinatorics*, 5(1998),#R9.

[8] R.P.Bryant and D.Singerman, Foundations of the theory of maps on surfaces with boundary,*Quart.J.Math.Oxford*(2),36(1985), 17-41.

[9] E.Bujalance, Cyclic group automorphisms of compact non-orientable Klein surfaces without boundary,*Pacific J. Mathematics*, vol.109, No.2,279-289(1983).

[10] E. Bujalance,J.J.Etayo and J.M.Gamboa, Hyperelliptic Klein surfaces, *Qurt. J.Math.Oxford*(2),36(1985), 141-157.

[11] E.Bujalance,J.J.Etayo,J.M.Gamboa and G.Gromadzki,*Automorphism groups of compact bordered Klein surfaces*, Lect.notes in Math.,1439, Springer-Verlag, Berlin,etc.(1990).

[12] C.Y.Chao, On the classification of symmetrical graphs with a prime number of vertices, Trans.Amer.Math.Soc. 158(1971), 247-256.

[13] J.Chern, J.L.Gross and R.G.Rieper, Overlap matrices and total imbedding distributions, *Discrete Math.*128(1994),73-94.

[14] S.S.Chern and W.H.Chern, *Lectures in Differential Geometry*, Peking University Press, 2001.

[15] B.P.Chetia and K.Patra, On metabelian groups of automorphisms of compact Riemann surfaces, *J.London Math.Soc*, Vol.33,No.2, 467-472(1986).

[16] S.Chimienti and M.Bencze, Smarandache paradoxist geometry, *Bulletin of Pure and Applied Sciences*, Delhi, India, Vol.17E, No.1(1998), 123-1124.

[17] J.Edmonds, A combinatorial representation for polyhedral surfaces, *Notices Amer. Math. Soc* 7 (1960)

[18] H. M.Farkas and I. Kra, *Riemann Surfaces*, Springer-Verlag New York inc(1980).

[19] M.L.Furst, J.L.Gross and R.Statman, Genus distributions for two class of graphs, *J.Combin.Theory, Ser B*, 46(1989),22-36.

[20] A.Gardiner,R.Nedela,J.Širáň and M.Škovera, characterization of graphs which underlie regular maps on closed surfaces, *J.London Math. Soc.*(2)59(1999),100-108.

[21] G.Gromadzki, Abelian Groups of automorphisms of compact non-orientable Klein surfaces without boundary, *Commentationes Mathematicae*, 28(1989),197-217.

[22] J.L.Gross and T.W.Tucker, *Topological graph theory*, John Wiley & Sons,1987.

[23] J.L.Gross and M.L.Furst, Hierarchy for imbedding-distribution invariants of a graph, *J.Graph Theory*,11(1987), 205-220.

[24] J.L.Gross and M.L.Furst, Genus distribution for bouquets of circles, *J.Combin. Theory, Ser B*, 47(1989), 292-306.

[25] F.Harary and W.T.Tutte, On the order of the group of a planar map, *J.Combin. Theory*, 1(1966), 194-195.

[26] W.J.Harwey,Cyclic groups of automorphisms of compact Riemann surfaces, *Quart J.Math. Oxford*, vol.17, No.2, 86-97(1966).

[27] H.Iseri, *Smarandache Manifolds*, American Research Press, Rehoboth, NM, 2002.

[28] H.Iseri, *Partially Paradoxist Smarandache Geometries*, http://www.gallup.unm.edu/s̃marandache/Howard-Iseri-paper.htm.

[29] G.A.Jones and D.Singerman, Theory of maps on orientable surfaces, *Proc.London Math. Soc.*(3),37(1978),273-307.

[30] V.Krishnamurthy, *Combinatorics: Theory and Application*, Ellis Horwood Limited,1986.

[31] J.H.Kwak and S.H.Shim, Total embedding distribution for bouquets of circles,

*Discrete Math.*248(2002),93-108.

[32] L.Kuciuk and M.Antholy, An Introduction to Smarandache Geometries, *Mathematics Magazine, Aurora, Canada*, Vol.12(2003), and online:
http://www.mathematicsmagazine.com/1-2004/Sm_Geom_1_2004.htm;
also at New Zealand Mathematics Colloquium, Massey University, Palmerston North, New Zealand, December 3-6,2001
http://atlas-conferences.com/c/a/h/f/09.htm;
also at the International Congress of Mathematicians (ICM2002), Beijing, China, 20-28, August, 2002,
http://www.icm2002.org.cn/B/Schedule.Section04.htm.

[33] Y.P.Liu, *Enumerative Theory of Maps*, Kluwer Academic Publishers , Dordrecht/ Boston/ London,1999.

[34] Y.P.Liu, *Advances in Combinatorial Maps*, Northern Jiaotong University Publisher, Beijing (2003).

[35] Y.P.Liu, *Embeddability in Graphs*, Kluwer Academic Publisher, Dordrecht / Boston / London (1995).

[36] Y.P. Liu, The maximum non-orientable genus of a graph (in Chinese), *Scientia Sinica (Special Issue on Math)*,**I**(1979),191-201.

[37] J.M.Lee, *Riemann Manifolds*, Springer-Verlag New York,Inc(1997).

[38] Lv Y.N. and Zhang X.L.*Riemann Surfaces*, Sciences Publisher Press, Beijing, 1991.

[39] C.Maclachlan, Abelian groups of automorphisms of compact Riemann surfaces, *Proc.London Math.Soc.*, vol.15,No.3,699-712(1965).

[40] A.Malnic, Group action,coverings and lifts of automorphisms, *Discrete Math*, 182(1998),203-218.

[41] A.Malinic,R.Nedela and M.Škoviera, Lifting graph automorphisms by voltage assignment, *Europ. J.Combinatorics*, 21(2000),927-947.

[42] Mantredo P.de Carmao, *Differential Geometry of Curves and Surfaces*, Pearson Education asia Ltd (2004).

[43] L.F.Mao, *A census of maps on surface with given underlying graph*, A doctor thesis in Northern Jiaotong University, Beijing, 2002.

[44] L.F.Mao and Y.P.Liu, New automorphism groups identity of trees, *Chinese Advance in Math.*,113-117,5(2002).

[45] L.F.Mao and Y.P.Liu, On the roots on orientable embeddings of graph, *Acta Math. Scientia*, 23A(3),287-293(2003).

[46] L.F.Mao and Y.P.Liu, Group action approach for enumerating maps on surfaces,*J.Applied Math. & Computing*, vol.13, No.1-2,201-215.

[47] L.F.Mao and Y.P.Liu, A new approach for enumerating maps on orientable surfaces, *Australasian J. Combinatorics*, vol.30(2004), 247-259.

[48] L.F.Mao and Y.P.Liu, The semi-arc automorphism group of a graph with application to map enumeration, *Graphs and Combinatorics*(accepted and to appear).

[49] L.F.Mao and Y.P.Liu, Automorphisms of maps with underlying Cayley graph and their application to enumeration, Submitted to *Discrete Math.*

[50] L.F.Mao, Y.P.Liu and F.Tian, Automorphisms of maps with a given underlying graph and their application to enumeration, *Acta Mathematica Sinica*, Vol.21, 2(2005),225-236.

[51] L.F.Mao and F.Tian, On oriented 2-factorable graphs, *J.Appl.Math. & Computing*, Vol.17(2005), 25-38.

[52] W.S.Massey, *Algebraic topology: an introduction*, Springer-Verlag,New York, etc.(1977).

[53] B.Mohar and C.Thomassen, *Graphs on Surfaces*, The Johns Hopkins University Press, London, 2001.

[54] B.P.Mull,R.G.Rieper and A.T.White, Enumeration 2-cell imbeddings of connected graphs,*Proc.Amer.Math.Soc.*, 103(1988), 321 330.

[55] B.P.Mull, Enumerating the orientable 2-cell imbeddings of complete bipartite graphs, *J.Graph Theory*, vol 30, 2(1999),77-90.

[56] R.Nedela and M Škoviera, Regular embeddings of canonical double coverings of graphs, *J.combinatorial Theory*,Ser.B 67, 249-277(1996).

[57] R.Nedela and M.Škoviera, Regular maps from voltage assignments and exponent groups, *Europ.J.Combinatorics*, 18(1997),807-823.

[58] PlanetMath, *Smarandache Geometries*, http://planetmath.org/encyclopedia/SmarandacheGeometries.htm1.

[59] K.Polthier and M.Schmies, Straightest geodesics on polyhedral surfaces, in *Mathematical Visualization* (ed. by H.C.Hege and K.Polthier), Springer-Verlag, Berlin, 1998.

[60] D.Singerman, Automorphisms of compact non–orientable Riemann surface, *Glasgow J. math.,* 12(1971), 50-59.

[61] F.Smarandache ,Paradoxist mathematics, *Collected Papers*,Vol.,II, 5-28, University of Kishinev Press, 1997.

[62] S.Stahl, Generalized embedding schemes, *J.Graph Theory* 2,41-52,1978.

[63] T.R.Stallings, Graphical theory of automorphisms of free groups, in *Combinatorial group theory and topology*(ed. by S.M.Gersten and J.R.Stallings), Princeton University Press,1987.

[64] J.Stillwell, *Classical topology and combinatorial group theory*, Springer-Verlag New York Inc., (1980).

[65] D.B.Surowski, Lifting map automorphisms and MacBeath's theorem, *J. Combin. Theory*, Ser B,50(1990),135-149.

[66] W.T.Tutte, What is a maps? in New Directions in the Theory of Graphs (ed.by F.Harary), Academic Press (1973), 309 325.

[67] A.Vince, Combinatorial maps,*J. Combin. Theory*, Ser B 34 (1983), 1-21.

[68] A.Vince, Regular combinatorial maps,*J. Combin. Theory*, Ser B 35 (1983),256-277.

[69] J.K.Weeks, *The shape of Space*, New York, Marcel Dekkler, Inc, 1985.

[70] A.T.White, *Graphs of Group on Surfaces- interactions and models*, Elsevier Science B.V. (2001).

[71] H.X.Wu, Y.N.Lv and Z.H.Chern, *Introduction to Compact Riemann Surfaces*, Science Publisher Press, Beijing, 1999.

[72] H.X.Wu, C.L.Shen and Y.L.Yu,*Elementary Riemann Geometry*, Peking University Press, 1989.

[73] M.Y.Xu, *Introduction to the Finite Groups (***I***)*, Science Publisher Press, Beijing, 1999.

Index

algebraic curve 105
atlas 1
analytic function 1
angle 42
angle transformation 42
antianalytic function 1
asymmetric graph 19
automorphism of a graph 13
automorphism of a Klein surface 4
automorphism of a map 10
automorphism of an s-manifold 4

boundary 2
Burnside Lemma 17

Cauhy-Riemann equation 1
classical type of s-manifolds 97
complete map 63
connected graph 5
covering mapping 31
cycle index of a group 94

degree of a curve 105
dianalytic function 1
divisor 104
dual map 8

elliptic vertex 3
embedding of a graph 6
embedding sequence 24
equivalent embedding 10
Euclid vertex 3
Euler-Poincaré formula 7

fixed-free action 36

Gauss-Bonnet theorem 106
Gauss mapping 105
graph 4
graphical property 44

Hurwitz theorem 44
hyperbolic vertex 3

incidence of semi-arc 14
induced action 57
isomorphic s-manifolds 4
isomorphism between maps 10

Klein group 8
Klein surface 1

lifting map 34

map 8
model of Klein surfaces 11
model of closed s-manifold 12
morphism 3

NEC group 4
non-Euclid area 42
non-orientable genus polynomial 21
non-orientable map 9

order of a graph 5
orientable genus polynomial 21
orientable map 9
orientation-preserving automorphism 57
orientation-reversing automorphism 57

path 5

permutation pair 81
pure rotation 6
pure rotation system 6

quadricell 8
quadricell set 31
quotient map 37

Riemann-Hurwitz equation 51
Riemann-Hurwitz formula 43
Riemann n-manifold 106
Riemann surface 1

root vertex 14
rooted map 9
rooted map sequence 24
rooted non-orientable map polynomial 20
rooted orientable map polynomial 20
rooted total map polynomial 20
rotation system 7

semi-arc 14
semi-arc automorphism of a graph 14
semi-regular graph 73
semi-regular map 73
simple graph 5
size of a graph 5
s-manifold 3
Smarandachely denied 3
Smarandache geometry 3
Smarandache type of s-manifolds 97

total genus polynomial 21
trail 5
type 1 edge 7
type 0 edge 7

underlying graph 9
uniformization theorem 104

voltage map 33

walk 5

y-linear 24

About the Author

Linfan Mao is a post-doctor in the Academy of Mathematics and Systems of Chinese Academy of Sciences in Beijing, P.R.China, where he lives with his wife Tieying Wang and daughter Beiqi Mao. His main interesting focus on the combinatorial map theory, differential geometry and Smarandache geometries and published more than 20 papers on the combinatorial maps, graphs and operation research in journals. He was born in December 31,1962 and got his BA in applied mathematics in Peking University in 1995 learnt by himself. In 2002, he got a PhD from the Northern Jiaotong University (Now the Beijing Jiaotong University) with a doctoral thesis *A census of maps on surface with given underlying graph* under the supervision of Professor Yanpei Liu. He was a worker from 1982 to 1987 and then an engineer in China Construction Second Engineering Bureau First Company until March,1999. After that, he become a doctor graduate student and also a senior engineer and a consultor in Guoxin Tendering Co., Ltd. until June,2003. Then he works in the Academy of Mathematics and Systems of Chinese Academy of Sciences as a post-doctor.

Abstract

A combinatorial map is a connected topological graph cellularly embedded in a surface. This monograph concentrates on the automorphism group of a map, which is related to the automorphism groups of a Klein surface and a Smarandache manifold, also applied to the enumeration of unrooted maps on orientable and non-orientable surfaces. A number of results for the automorphism groups of maps, Klein surfaces and Smarandache manifolds and the enumeration of unrooted maps underlying a graph on orientable and non-orientable surfaces are discovered. An elementary classification for the closed s-manifolds is found. Open problems related the combinatorial maps with the differential geometry, Riemann geometry and Smarandache geometries are also presented in this monograph for the further applications of the combinatorial maps to the classical mathematics.

ISBN 1-931233-92-6

56995>

9 781931 233927